REV	ZONE	DESCRIPTION OF CHANGE

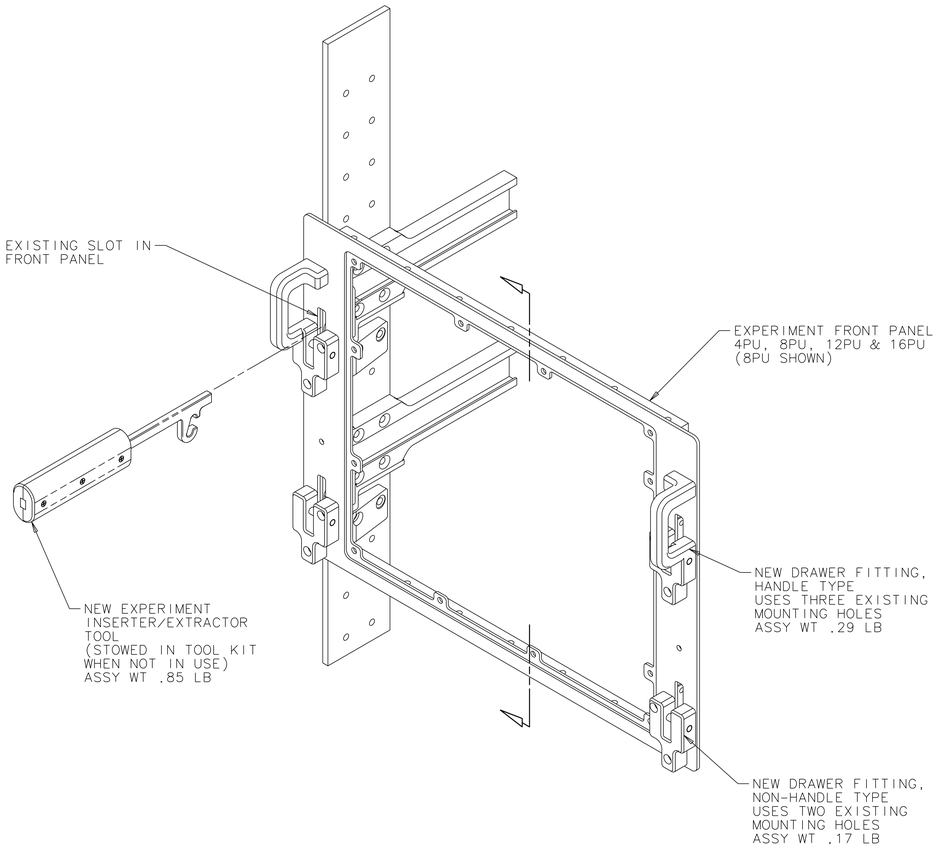

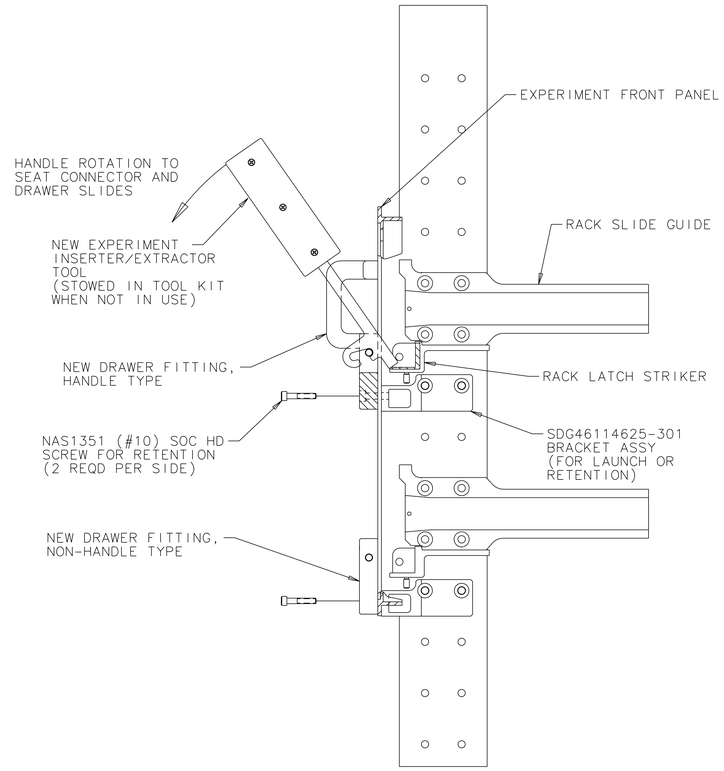

EXPERIMENT EXTRACTION

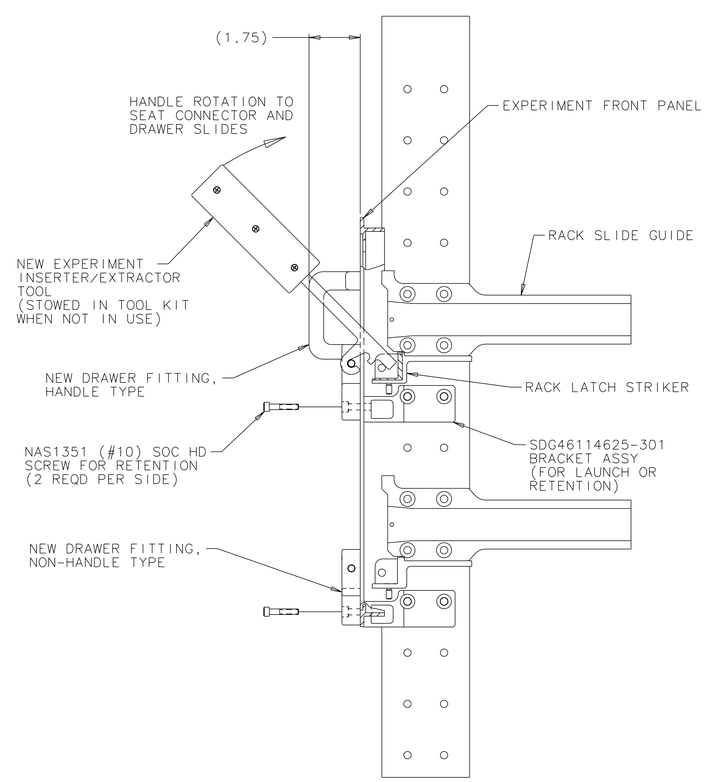

EXPERIMENT INSERTION

DIMENSIONAL TOLERANCE UNLESS NOTED OTHERWISE	SIGNATURES	DATE	NATIONAL AERONAUTICS AND SPACE ADMINISTRATION
.0 ± .1 .000 ± .005 .00 ± .02 ANGULAR ± .5°	DR J.L. GLASGOW	9/27/99	LYNDON B. JOHNSON SPACE CENTER HOUSTON, TEXAS
SURFACE FINISH IN MICROINCHES RMS UNLESS NOTED OTHERWISE	ENG		EXPERIMENT/ RACK INTERFACE, INSERTER/EXTRACTOR TOOL METHOD-
	CH		
	APP		
FRACTURE CRITICAL / NEXT ASSY N/A	QE		PROJECT HRF
☐ YES / PROJECT:	MATL		
☒ NO / LIBRARY:	STRESS		SIZE E / CODE ID NO. 21356 / DWG NO. SK1800927-1 / REV
☒ FLT HDWR ☐ APPLICABLE GSE	AUTH		SCALE: 1/2 / ORG EA5 / SHEET 1 OF 1
☐ OTHER (SPECIFY) _____			