REV	ZONE	DESCRIPTION OF CHANGE

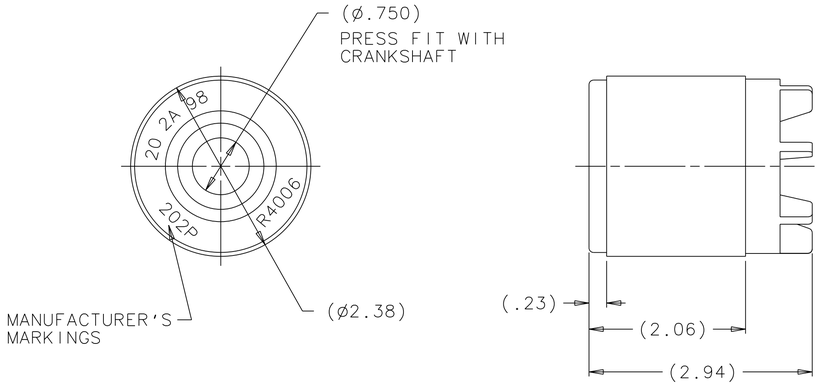

ARMATURE

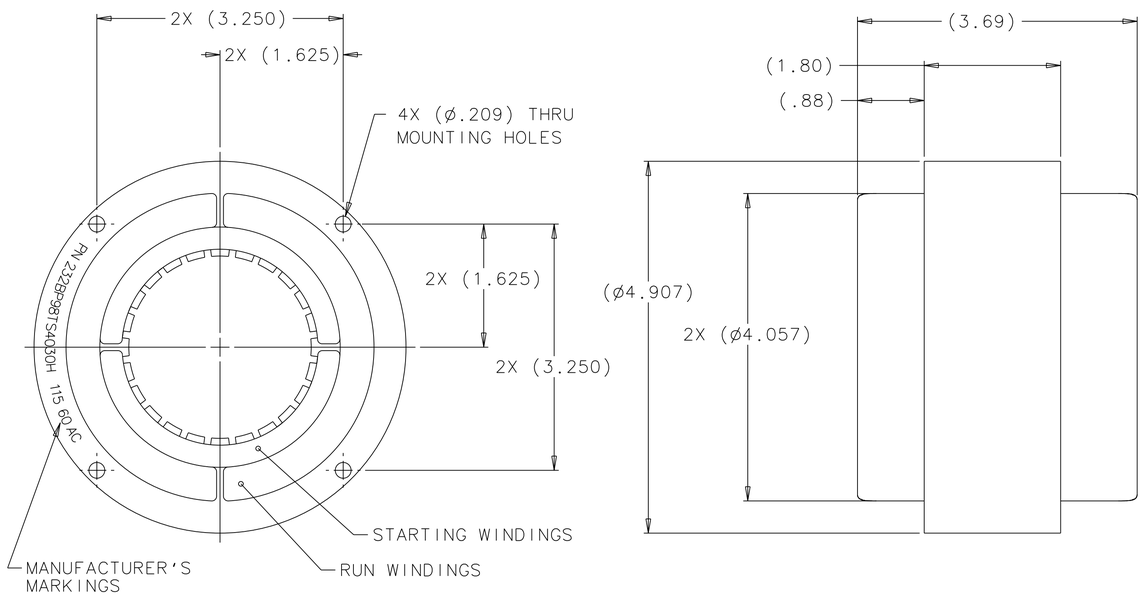

COIL

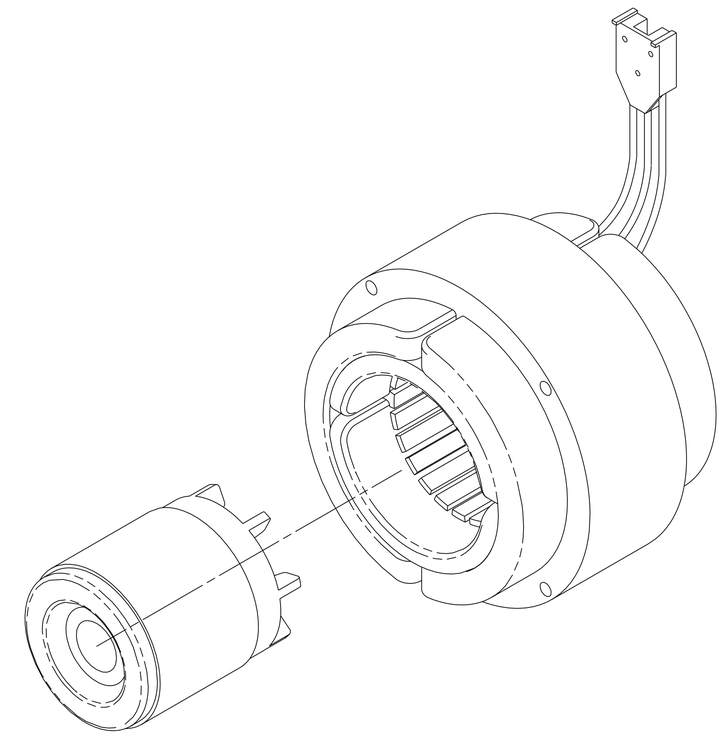

1. ALL DIMENSIONS TAKEN FROM EXISTING COMPRESSOR MOTOR.

NOTES: UNLESS OTHERWISE SPECIFIED.

DIMENSIONAL TOLERANCE UNLESS NOTED OTHERWISE .0 ± .1 .00 ± .02 .000 ± .005 ANGULAR ± .5°	SIGNATURES	DATE	NATIONAL AERONAUTICS AND SPACE ADMINISTRATION LYNDON B. JOHNSON SPACE CENTER HOUSTON, TEXAS
SURFACE FINISH IN MICROINCHES RMS UNLESS NOTED OTHERWISE	DR J.L. GLASGOW	10/4/99	EXISTING AC COMPRESSOR MOTOR-
FRACTURE CRITICAL ☐ YES ☒ NO	ENG		PROJECT HRF REFRIGERATED CENTRIFUGE
NEXT ASSY N/A	CH		SIZE D CODE ID NO. 21356 DWG NO. DRAWING NO. REV
PROJECT:	APP		
LIBRARY:	QE		
☒ FLT HDWR ☐ APPLICABLE GSE	MATL		
☐ OTHER (SPECIFY) _____	STRESS		SCALE: 1/1 ORG EA5 SHEET 1 OF 1
	AUTH		