REV	ZONE	DESCRIPTION OF CHANGE

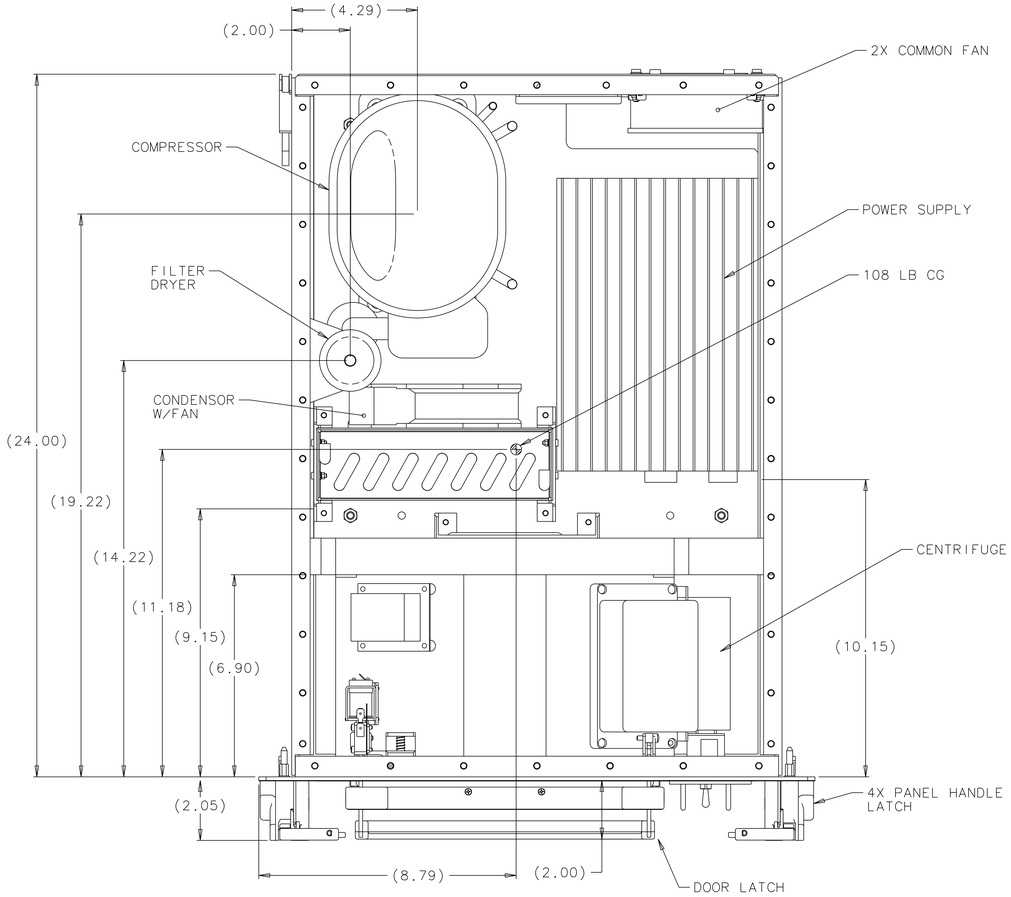

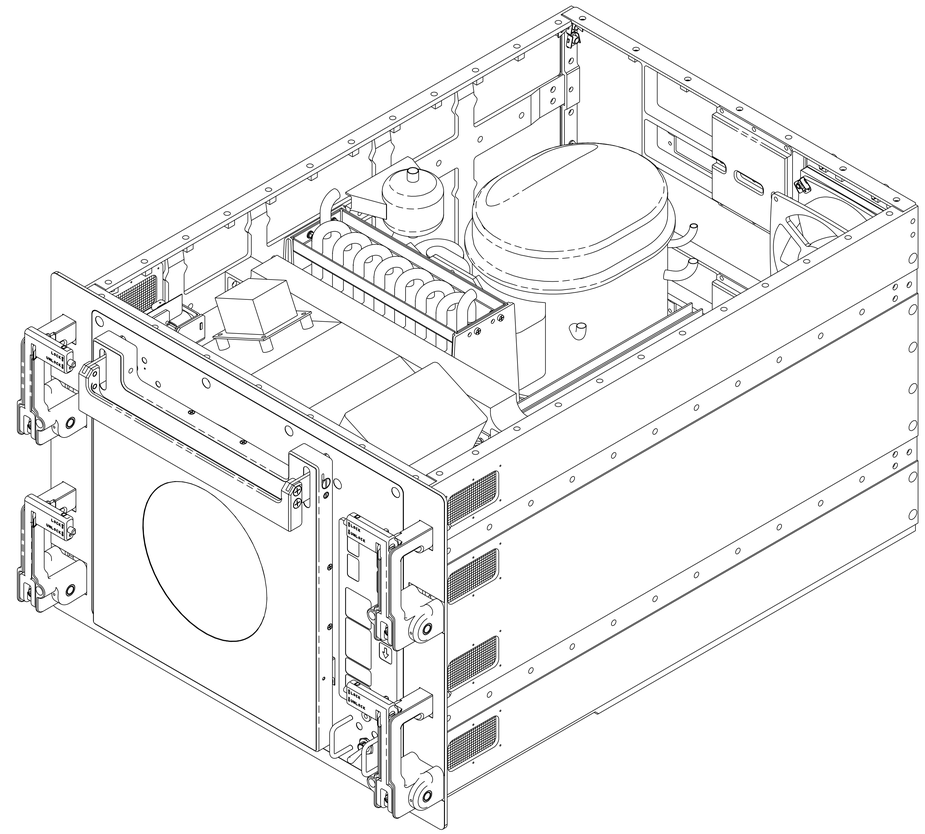

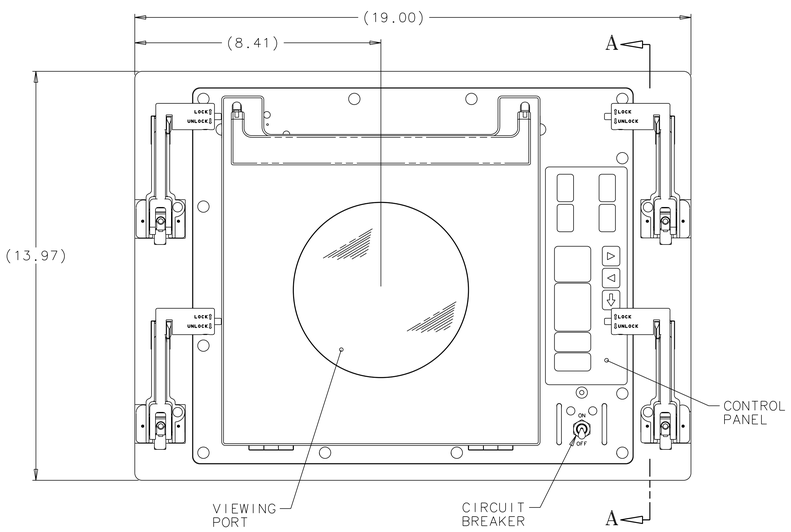

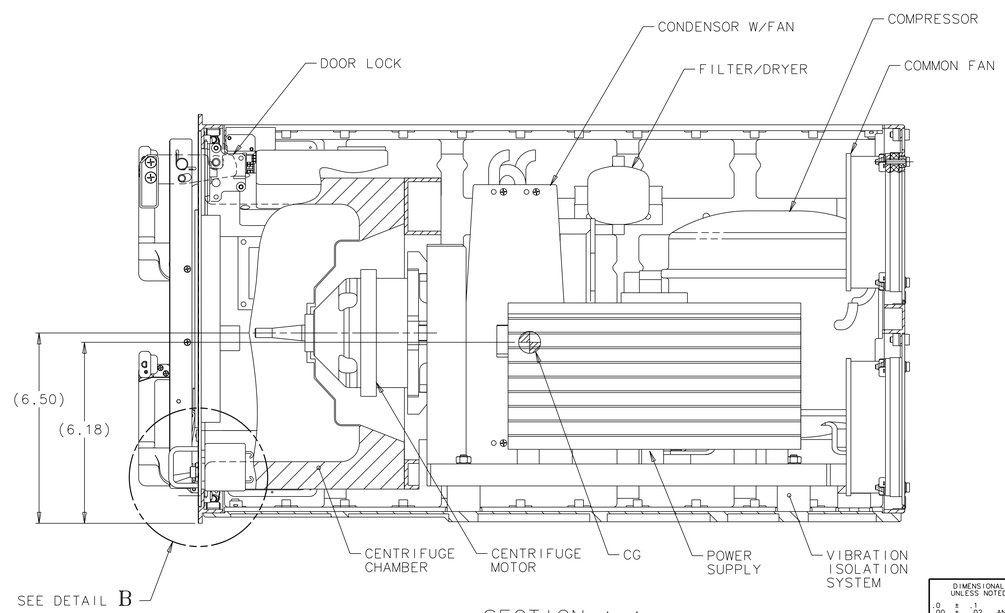

SECTION A–A

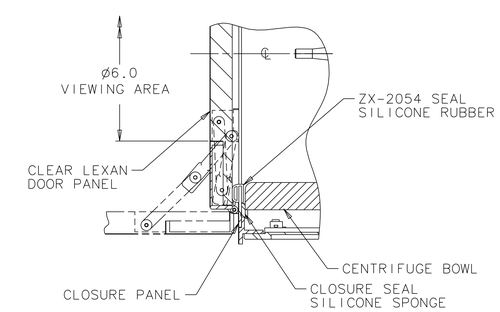

DETAIL B

DIMENSIONAL TOLERANCE UNLESS NOTED OTHERWISE	SIGNATURES	DATE	NATIONAL AERONAUTICS AND SPACE ADMINISTRATION
.0 ± .1 .000 ± .005 .00 ± .02 ANGULAR ± .5°	DR J.L. GLASGOW	9/22/99	LYNDON B. JOHNSON SPACE CENTER HOUSTON, TEXAS
SURFACE FINISH IN MICROINCHES RMS UNLESS NOTED OTHERWISE ✓	ENG		REFRIGERATED CENTRIFUGE ARRANGEMENT LAYOUT-
FRACTURE CRITICAL	CH		
☐ YES	APP		PROJECT HRF REFRIGERATED CENTRIFUGE
☒ NO	QE		
NEXT ASSY	MATL		SIZE E · CODE ID NO. 21356 · DWG NO. DRAWING NO. · REV
PROJECT:	STRESS		
LIBRARY:	AUTH		SCALE: 1/2 · ORG EA5 · SHEET 1 OF 1
☒ FLT HDWR ☐ APPLICABLE GSE			
☐ OTHER (SPECIFY)			