REV	ZONE	DESCRIPTION OF CHANGE

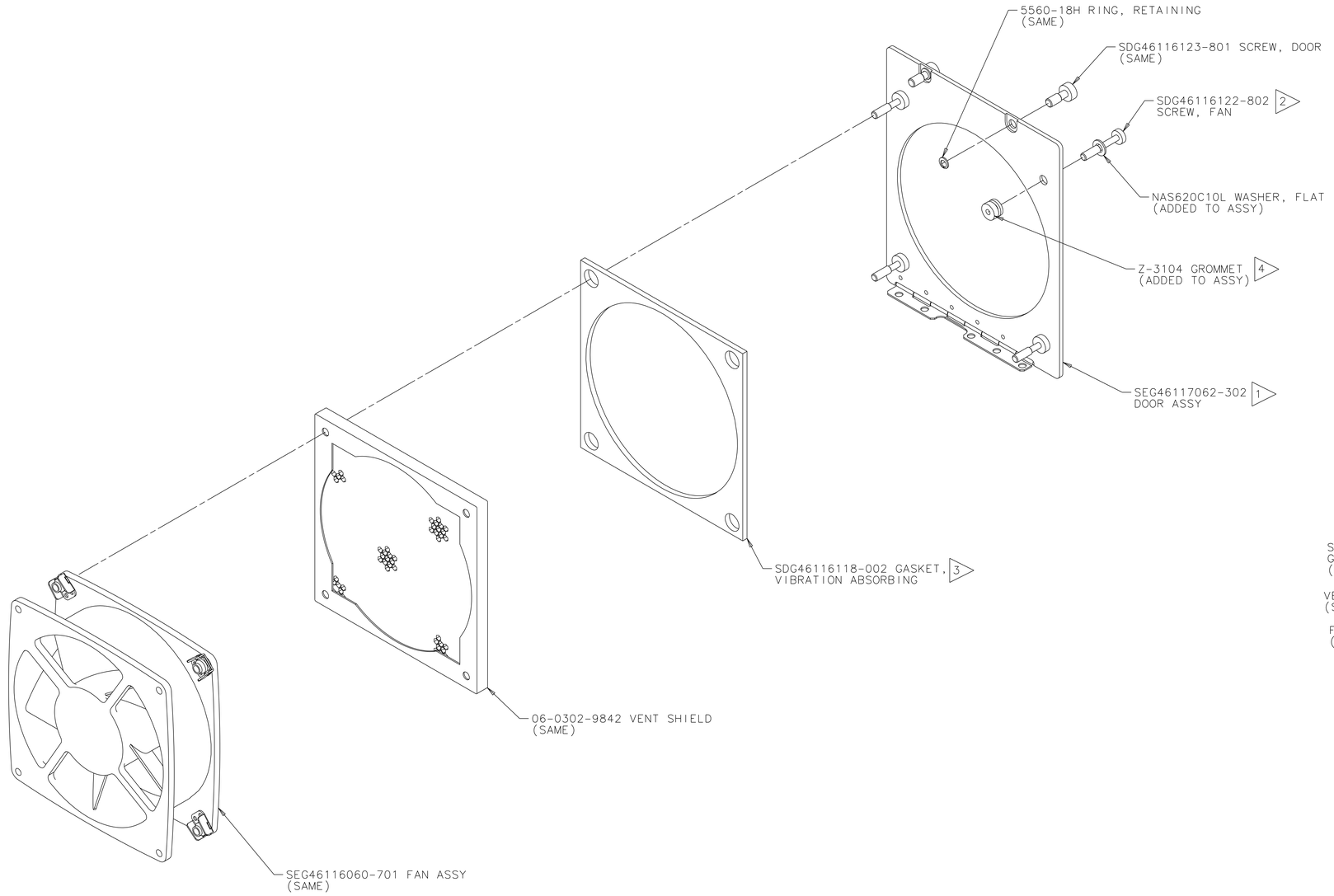

SEG46116120-302

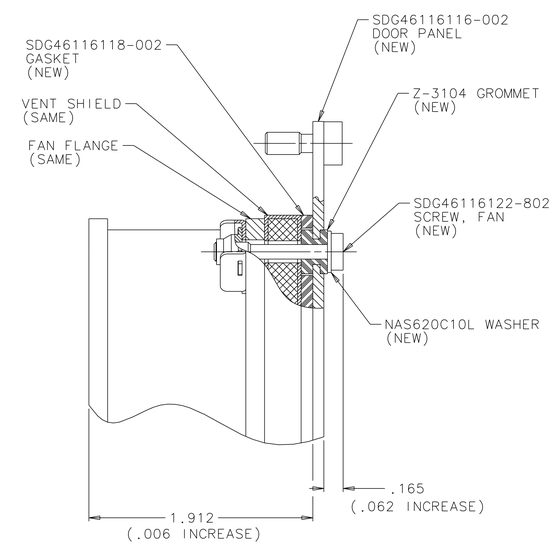

MOUNTING DETAIL

SCALE: 2/1

5 REVISE DRAWING SEG46116120 TO ADD -302 ASSEMBLY CONFIGURATION FOR THE COMMON FAN MADE FROM PARTS SHOWN ON THIS PROPOSAL FOR VIBRATION ISOLATION.

4 VIBRATION MOUNT GROMMET, MINOR RUBBER CO. MOUNTED IN PANEL TO ISOLATE AND RETAIN FAN SCREW.

3 REVISE DRAWING SDG46116118 TO ADD -002 GASKET. SAME AS -001 EXCEPT LARGER FAN MOUNTING HOLES.

2 REVISE DRAWING SDG46116122 TO ADD -802 SCREW. LENTHEN THE UNDERCUT PORTION FOR SELF RETENTION FEATURE.

1 REVISE DRAWING SDG46116116 TO ADD -002 PANEL FOR FOR THE NEW FAN MOUNTING HOLES. REVISE DRAWING SEG46117062 TO -302 ASSEMBLY FOR THE NEW DOOR PANEL.

FLAG NOTES:

QTY	PART NUMBER	DESCRIPTION	MATERIAL	SPECIFICATION	ITEM

DIMENSIONAL TOLERANCE UNLESS NOTED OTHERWISE .0 ± .1 .000 ± .005 .00 ± .02 ANGULAR ± .5°

SURFACE FINISH IN MICRONINCHES RMS UNLESS NOTED OTHERWISE

FRACTURE CRITICAL ☐ YES ☒ NO

NEXT ASSY N/A

PROJECT:

LIBRARY:

☒ FLT HDWR ☐ APPLICABLE GSE ☐ OTHER (SPECIFY) _____

SIGNATURES		DATE
DR	J.L. GLASGOW	8/27/99
ENG		
CH		
APP		
QE		
MATL		
STRESS		
AUTH		

NATIONAL AERONAUTICS AND SPACE ADMINISTRATION

LYNDON B. JOHNSON SPACE CENTER HOUSTON, TEXAS

HRF COMMON FAN
VIBRATION ISOLATION
PROPOSAL-

PROJECT HRF REFRIGERATED CENTRIFUGE

SIZE	CODE ID NO.	DWG NO.	REV
E	21356	DRAWING NO.	

SCALE: 1/1 ORG EA5 SHEET 1 OF 1