REV	ZONE	DESCRIPTION OF CHANGE

-301	PART NUMBER	DESCRIPTION	MATERIAL	SPECIFICATION	ITEM
					99
					98
					97
					96
					95
					94
					93
					92
					91
					90
					89
					88
					87
					86
					85
					84
					83
					82
					81
					80
					79
					78
					77
					76
					75
					74
					73
					72
					71
					70
					69
					68
					67
					66
					65
					64
					63
					62
					61
					60
AR	250	THERMAL GREASE		16	59
1	HLMP-0931	LAMP, PANEL MOUNTING	RED	MIL-L-19500/521	58
AR	222	SEALANT, THREAD		10	57
AR	3140	ADHESIVE, SILICONE		7	56
AR	M22759/11-12-0	WIRE	12 AWG	MIL-W-22759	55
AR	M22759/11-12-9	WIRE	12 AWG	MIL-W-22759	54
12	226-0349-000	GUIDE, SOCKET		8	53
AR	M23053/8-003C	TUBING, SHRINK		MIL-I-23053	52
AR	M23053/8-002C	TUBING, SHRINK		MIL-I-23053	51
1	RN55D3300F	RESISTOR	330 OHM	MIL-R-10509	50
1	PSCM	POWER SUPPLY CONTROL MODULE			49
6	SCI-6140-009	FILTER, EMI		4	48
1	JTXM19500/52102	LAMP, PANEL MOUNTING	GREEN	MIL-L-19500/521	47
3	M83733/3RA131	CONNECTOR, DATA			46
3	M83733/3RA018	CONNECTOR, POWER	J1, J2, J3		45
1	M39019/05-259	CIRCUIT BREAKER	3 POLE		44
2	A-45007-440-24	HANDLE		3	43

-301	PART NUMBER	DESCRIPTION	MATERIAL	SPECIFICATION	ITEM
					42
					41
4	NAS1351N4-24	SCREW, SOC HD	CRES A286 .250-28UNRF-3A X 1.50		40
2	NAS1102E04-7	SCREW, CSK, 100°	CRES A286 .112-40UNJC-3A X .44		39
12	MS24680-86	NUT, PLAIN, CAP	CRES .312-24UNF-2B		38
12	MS21043-04	NUT, HEX, SELF-LKG	CRES A286 .112-40UNJC-3B		37
24	AN960C4	WASHER, FLAT	CRES NO. 4 NOMINAL		36
12	NAS1101E4-8	SCREW, FILH	CRES A286 .112-40UNJC-3A X .50		35
5	NAS1153E6	SCREW, CSK, 100°	CRES A286 .190-32UNJF-3A X .65		34
15	NAS1153E4	SCREW, CSK, 100°	CRES A286 .190-32UNJF-3A X .53		33
28	NAS1102E3-10	SCREW, CSK, 100°	CRES A286 .190-32UNJF-3A X .63		32
4	NAS1102E3-7	SCREW, CSK, 100°	CRES A286 .190-32UNJF-3A X .44		31
2	NAS1102E06-5	SCREW, CSK, 100°	CRES A286 .138-32UNJC-3A X .31		30
8	NAS1102E04-4	SCREW, CSK, 100°	CRES A286 .112-40UNJC-3A X .25		29
6	NAS1101E3-12	SCREW, FILH	CRES A286 .190-32UNJF-3A X .75		28
4	NAS1101E3-8	SCREW, FILH	CRES A286 .190-32UNJF-3A X .50		27
4	NAS1101E3-7	SCREW, FILH	CRES A286 .190-32UNJF-3A X .43		26
8	NAS1101E06-6	SCREW, FILH	CRES A286 .138-32UNJC-3A X .38		25
4	NAS620C416	WASHER, FLAT	CRES .250 NOMINAL		24
20	NAS620C10L	WASHER, FLAT	CRES NO. 10 NOMINAL		23
8	NAS620C6	WASHER, FLAT	CRES NO. 6 NOMINAL		22
4	MS51971-1	NUT, HEX	CRES 300 SERIES .250-20UNC-2B		21
1	SEG46117403-301	POWER CABLE ASSY			20
1	SEG46117386-301	CENTRIFUGE LAUNCH SPACER ASSY			19
1	SDG46117976-301	REFRIGERANT TUBING ASSEMBLY			18
1	SEG46118175-301	MOUNTING ASSY, OPTICAL SWITCH			17
1	SEG46117375-301	LOCK SLIDER ASSY			16
1	SEG46117931-801	BRAKING RESISTOR			15
1	SEG46117716-301	STOWAGE DRAWER ASSY			14
1	SEG46117410-301	POWER UNIT ASSY			13
1	SDG46117398-801	CONTROL PANEL ASSY			12
1	SEG46117393-801	DOOR LATCH ASSY			11
1	SEG46117392-801	DOOR INTERLOCK SWITCH ASSY			10
1	SEG46117389-301	CENTRIFUGE MOTOR SUPPORT ASSY			9
1	SEG46117386-801	CENTRIFUGE ASSY			8
1	SEG46117381-301	MOUNTING BRACKET ASSY			7
1	SDG46117379-801	FILTER/DRYER			6
1	SEG46117371-301	DOOR ASSEMBLY			5
1	SDG46117370-801	DOOR SEAL			4
1	SEG46117362-301	12PU DRAWER ASSY			3
2	SEG46117051-301	PWB ASSY, FAN CONTROLLER			2
1	SDG46114565-001	TOP PANEL			1
REF	SIG46117407	SYSTEM SCHEMATIC			
REF	SIG46117406	WIRE DATA LIST			
-	-301	REFRIGERATED CENTRIFUGE ASSY		?	

PRELIMINARY

18. DISCARD VENDOR SUPPLIED LOCKWASHERS.
17. APPLY A THIN LAYER OF THERMAL GREASE (ITEM 59) TO THE MATING SURFACE OF ITEM 15 (BRAKING RESISTOR) PRIOR TO ASSEMBLY.
16. THERMALLOY INC, DALLAS, TX.
15. ITEM 40 SCREWS ARE REQUIRED FOR LAUNCH ONLY AND WILL BE REMOVED AND DISCARDED FOR OPERATION ON ORBIT.
14. ADUST ITEM 17 TO POSITION SWITCH WITH CLEARANCE AROUND LOCKING TAB OF ITEM 10. SWITCH SHALL BE IN THE OPEN POSITION WITH CIRCUIT INTERRUPTED BY THE LOCKING TAB AS SHOWN. RETURN ANY UNUSED SHIMS OF ITEM 17 TO BOND.
13. TWO BRACKETS AND FOUR SCREWS ARE PART OF CONTROL PANEL ASSY (ITEM 12). ASSEMBLE AS SHOWN. HAND TORQUE SCREWS ONLY.
12. FIT STOWAGE DRAWER (ITEM 14) INTO 12PU DRAWER ASSY (ITEM 3) BY ADDING OR REMOVING SHIMS FROM EACH SIDE. FIT SHALL BE SMOOTH WITH A MAXIMUM OF .020 CLEARANCE. RETURN TO BOND ANY SHIMS NOT REQUIRED.
11. APPLY ONE DROP OF SEALANT (ITEM 57) TO SCREW THREADS PER MANUFACTURER'S INSTRUCTIONS.
10. LOCTITE CORP, NEWINGTON, CT.
9. STAKE EMI FILTERS (ITEM 48) AND WIRES (ITEMS 54 & 55) WITH ADHESIVE (ITEM 56). SEE DETAIL D FOR MOUNTING AND WIRING.
8. ITT CANNON, SANTA ANA, CA.
7. DOW CORNING, MIDLAND, MI.
6. INSTALL RESISTOR (ITEM 50) ON ANODE LEAD OF LAMP (DS1) AND COVER EXPOSED LEADS WITH SHRINK TUBING (ITEMS 51 AND 52). STAKE WITH ADHESIVE (ITEM 53).
5. AEROVIRONMENT INC, SOUTHERN, CA.
4. SPECTRUM CONTROL, INC, ERIE, PA.
3. GLOBE ELECTRONIC HARDWARE, INC, WOODSIDE, NY.
2. INDEPENDENT INK INC, GARDENA, CA.
1. PART NUMBER SHALL BE MARKED IN .12 INCH HIGH CHARACTERS BY RUBBER STAMPING USING ITEM X PER NASA/JSC PRC-9002, PARA 3.3.7. LOCATE APPROXIMATELY AS SHOWN.

FLAG NOTES:

10. WIRE PER SIG46117406 WIRE DATA LIST AND SIG46117407 SYSTEM SCHEMATIC.
9. APPLY TORQUE OF 25-30 INCH POUNDS ABOVE RUNNING TORQUE TO SIZE 10 FASTENERS.
8. APPLY TORQUE OF 17-20 INCH POUNDS ABOVE RUNNING TORQUE TO SIZE 8 FASTENERS.
7. APPLY TORQUE OF 150-177 INCH OUNCES ABOVE RUNNING TORQUE TO SIZE 6 FASTENERS.
6. APPLY TORQUE OF 77-91 INCH OUNCES ABOVE RUNNING TORQUE TO SIZE 4 FASTENERS.
5. ALL REFERENCED SPECIFICATIONS AND STANDARDS SHALL BE OF THE LATEST REVISION LEVEL OR AS SPECIFIED IN THE PROCUREMENT DOCUMENT. IN THE CASE OF CONFLICT, THE PROCUREMENT DOCUMENT SHALL TAKE PRECEDENCE.
4. CLEAN PER NASA/JSC PRC-5001, LEVEL GC.
3. THIS ASSEMBLY DOES NOT CONTAIN FRACTURE CRITICAL PARTS.
2. ALL DIMENSIONS ARE IN INCHES.
1. INTERPRET PER EDS MANUAL JPG 8500.4.

NOTES: UNLESS OTHERWISE SPECIFIED.

DIMENSIONAL TOLERANCE UNLESS NOTED OTHERWISE: .0 ± .1, .00 ± .02, .000 ± .005, ANGULAR ± .5°

SURFACE FINISH IN MICROINCHES RMS UNLESS NOTED OTHERWISE: 125

FRACTURE CRITICAL: ☐ YES ☒ NO

NEXT ASSY: N/A

PROJECT: B118 REF CENT

LIBRARY: ASSEMBLIES

☒ FLT HDWR ☐ APPLICABLE GSE ☐ OTHER (SPECIFY) _____

SIGNATURES		DATE
DR	J.L. GLASCOW	11/14/00
ENG		
CH		
APP	T. APPROVER	99/99/99
QE	T. QE	99/99/99
MATL	T. MATERIALS	99/99/99
STRESS	T. STRESS	99/99/99
AUTH	T. AUTHORIZER	99/99/99
	TEST APP	99/99/99

NATIONAL AERONAUTICS AND SPACE ADMINISTRATION
LYNDON B. JOHNSON SPACE CENTER HOUSTON, TEXAS

REFRIGERATED CENTRIFUGE ASSEMBLY-

PROJECT B118 REFRIGERATED CENTRIFUGE

SIZE E | CODE IID NO. 21356 | DWG NO. SEG46117400 | REV TST

SCALE: 1/2 | ORG EA5 | SHEET 1 OF 5

STATUS: Check for DCNs against the drawing.

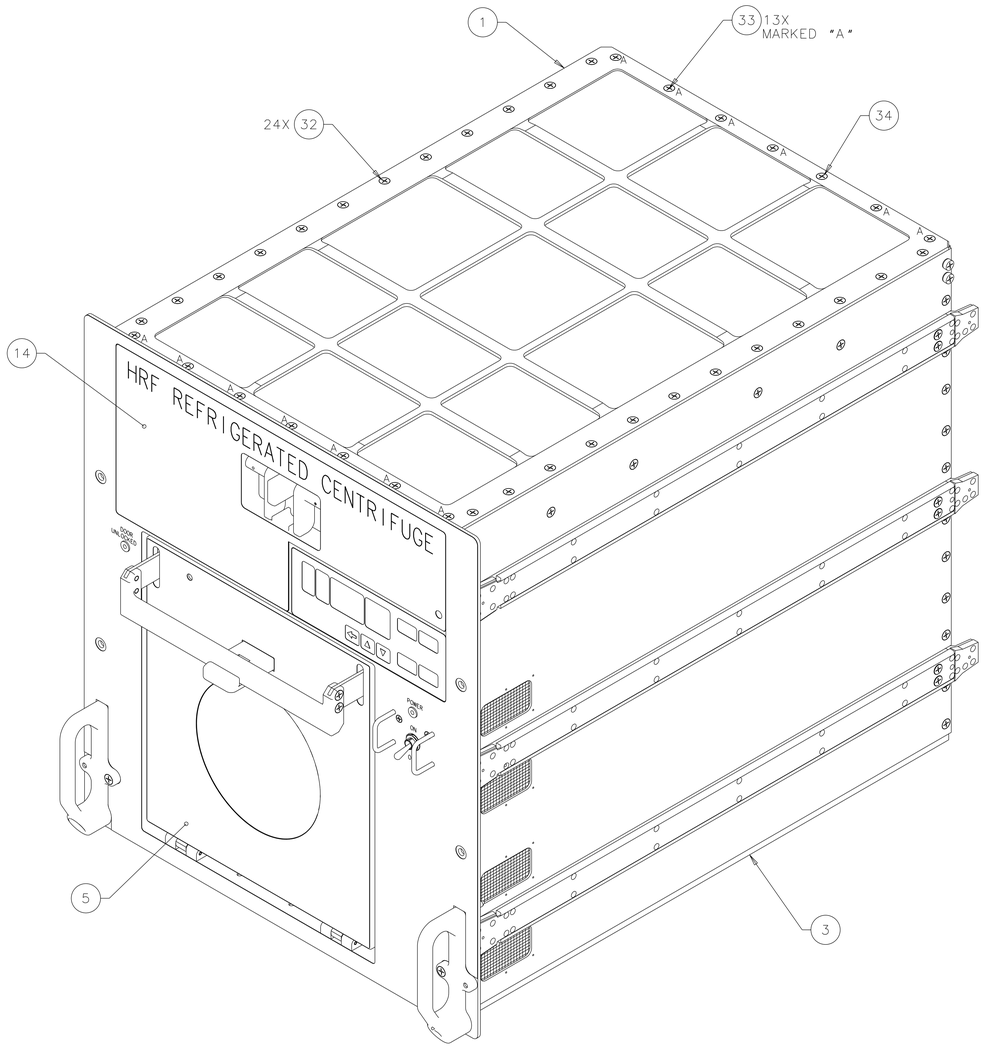

-301

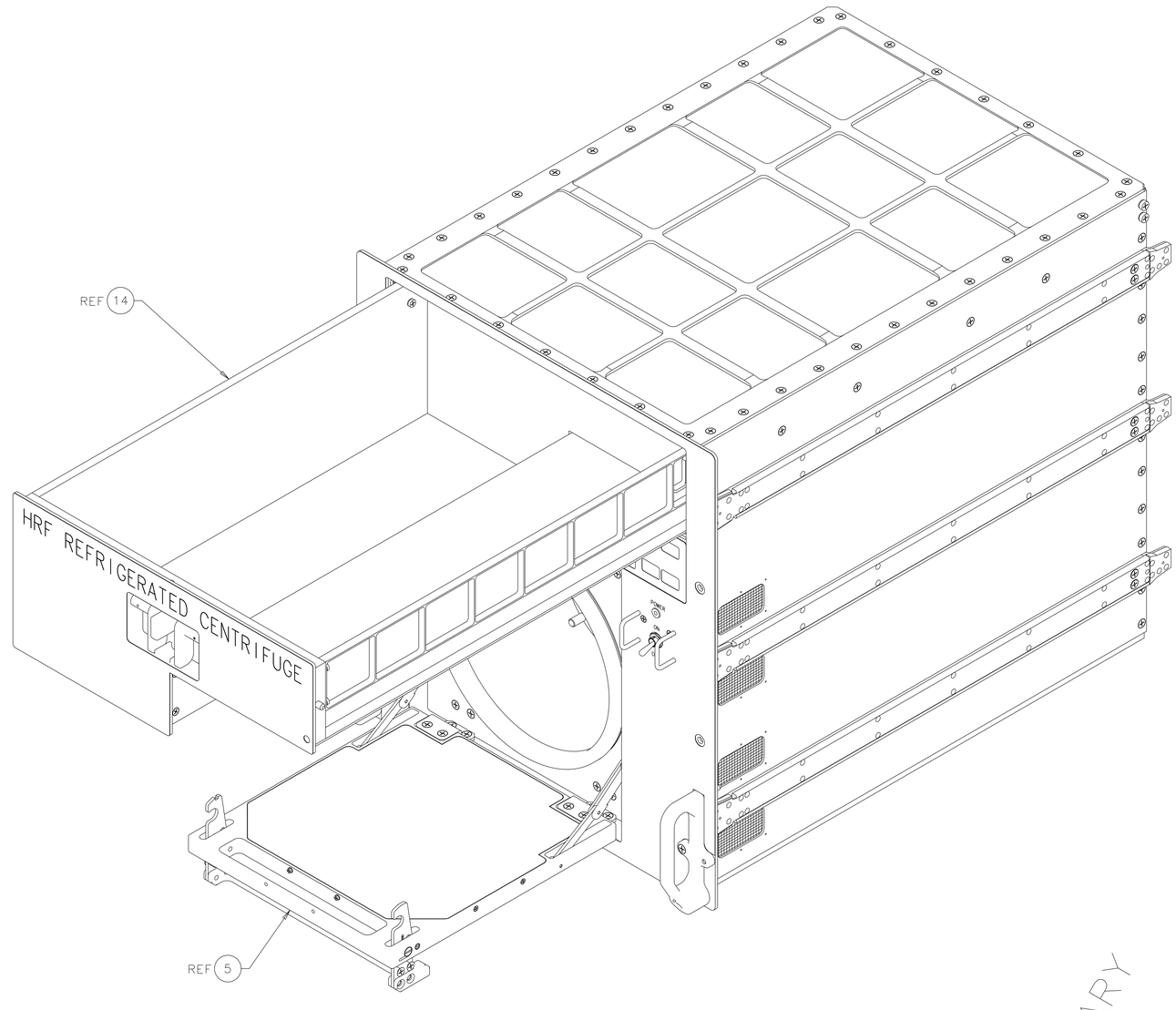

(-301)
DEPLOYED

PRELIMINARY

T. APPROVER	99/99/99					
T. QE	99/99/99					
T. MATERIALS	99/99/99					
T. STRESS	99/99/99	SIZE E	CODE ID NO. 21356	DWG NO. SEG46117400		REV TST
T. AUTHORIZER	99/99/99					
TEST APP	99/99/99	SCALE: 1/2	ORG EA5		SHEET 2 OF 5	

STATUS: Check for DCNs against the drawing.

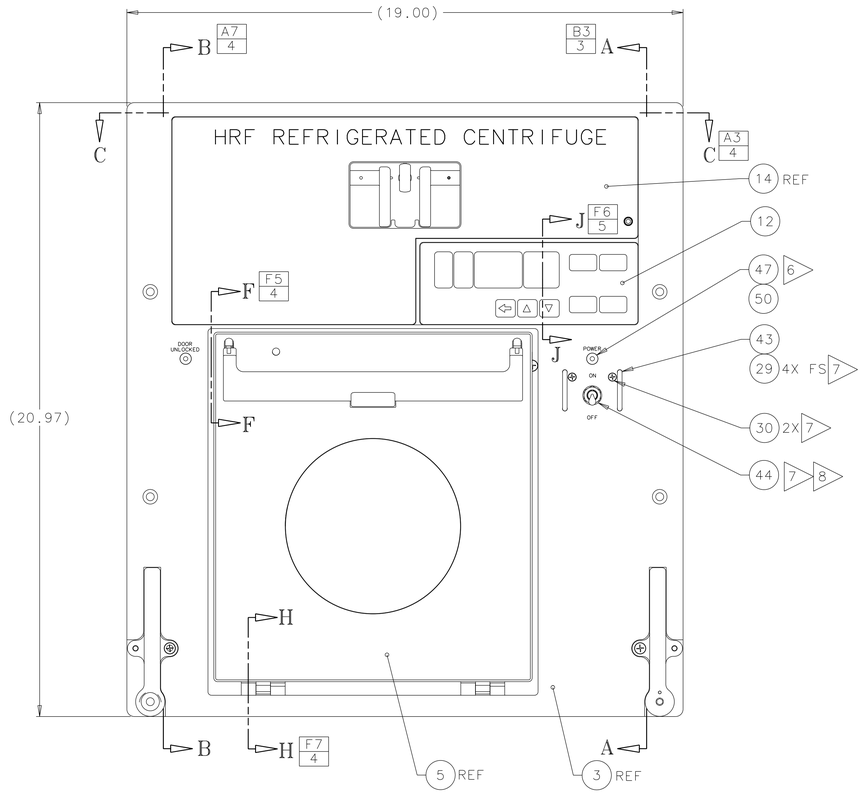

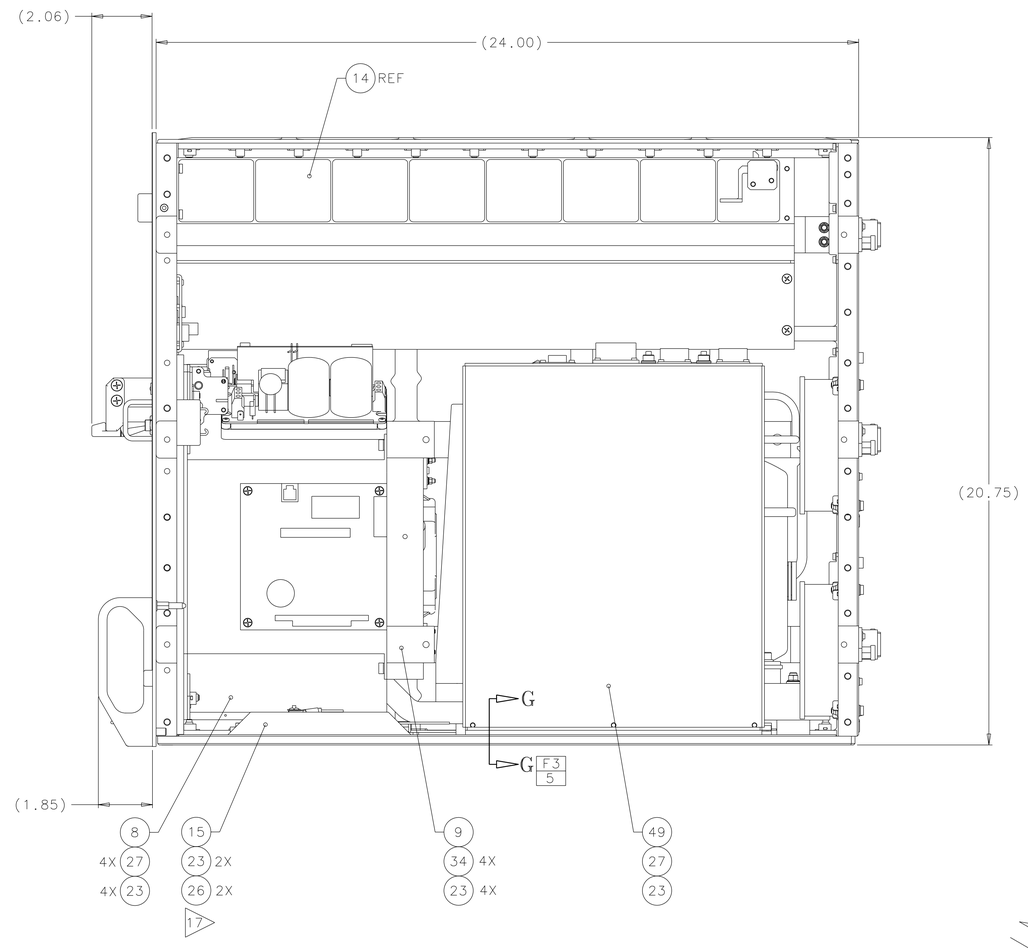

SECTION A–A E6/3

PRELIMINARY

T. APPROVER	99/99/99
T. QE	99/99/99
T. MATERIALS	99/99/99
T. STRESS	99/99/99
T. AUTHORIZER	99/99/99
TEST APP	99/99/99

SIZE	CODE ID NO.	DWG NO.	REV
E	21356	SEG46117400	TST
SCALE: 1/2	ORG EA5	SHEET 3 OF 5	

STATUS: Check for DCNs against the drawing.

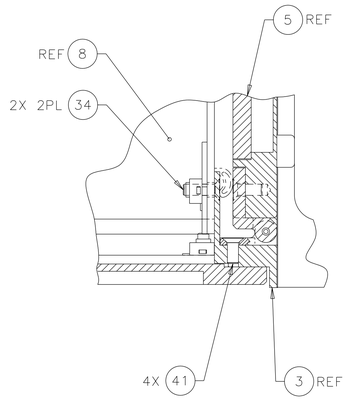

SECTION H–H [C7/3]
SCALE: 1/1

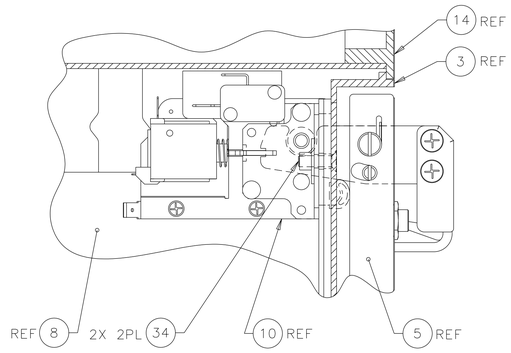

SECTION F–F [D7/3]
SCALE: 1/1

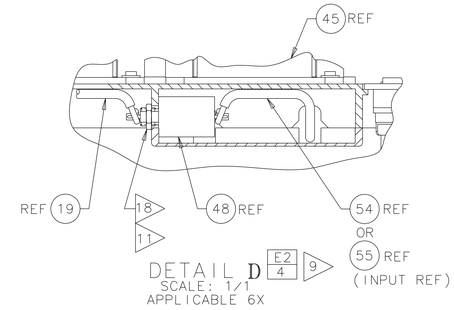

DETAIL D [E2/4]
SCALE: 1/1
APPLICABLE 6X

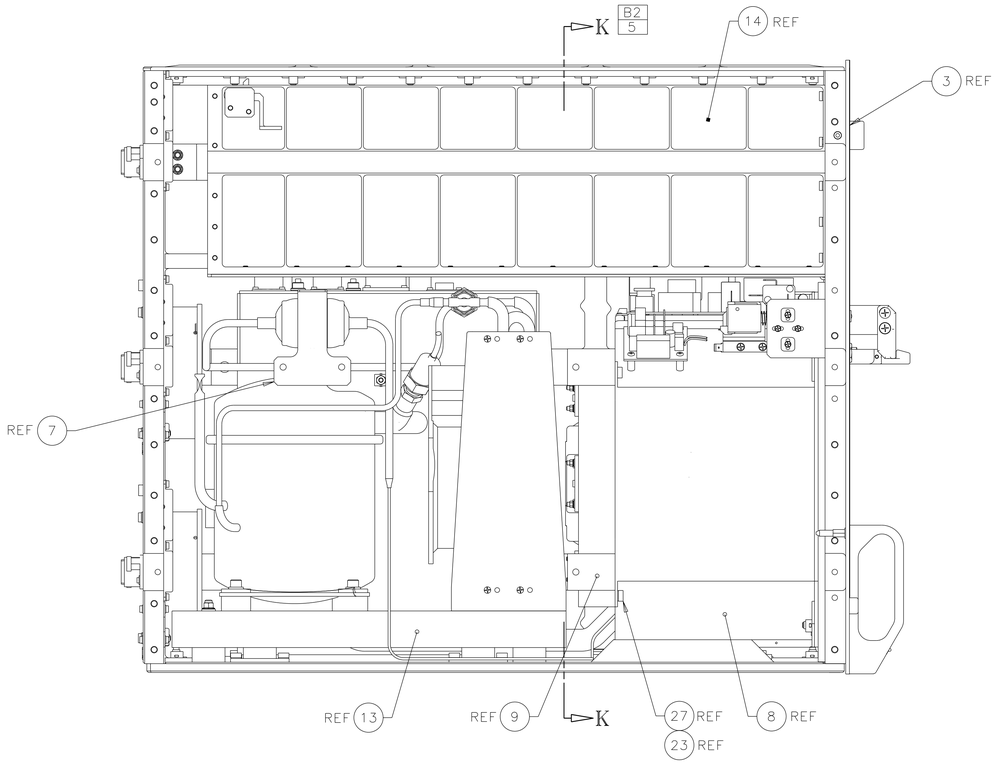

SECTION B–B [E8/3]

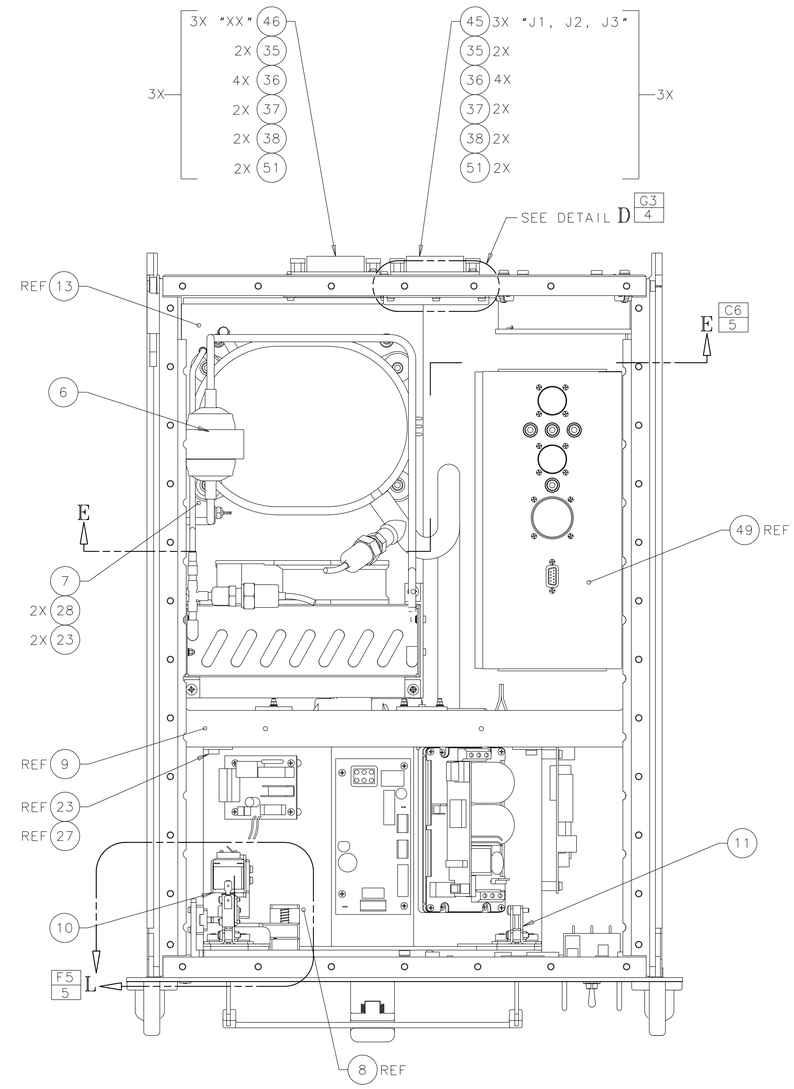

VIEW C–C [E6/3]
ITEMS 1 & 14 REMOVED

PRELIMINARY

T. APPROVER	99/99/99					
T. QE	99/99/99					
T. MATERIALS	99/99/99					
T. STRESS	99/99/99	SIZE E	CODE ID NO. 21356	DWG NO. SEG46117400		REV TST
T. AUTHORIZER	99/99/99					
TEST APP	99/99/99	SCALE: 1/2	ORG EA5		SHEET 4 OF 5	

STATUS: Check for DCNs against the drawing.

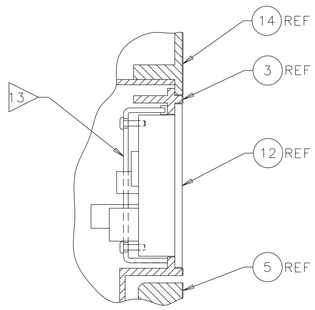

SECTION J–J [E6/3]
SCALE: 1/1

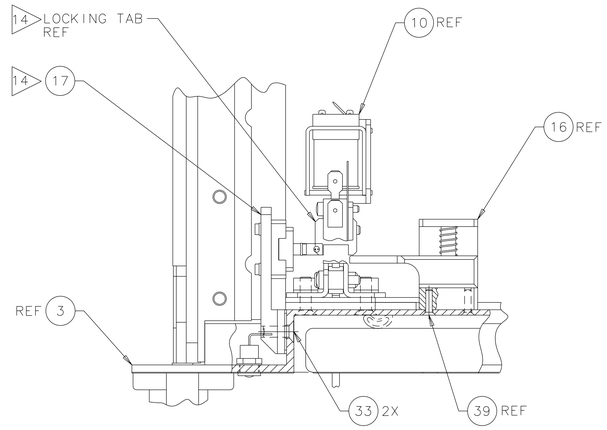

DETAIL L [B4/4]
SCALE: 1/1

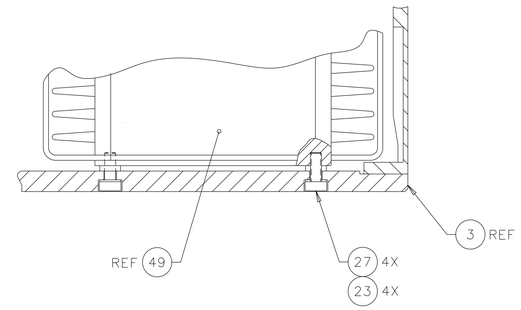

SECTION G–G [C3/3]
SCALE: 1/1

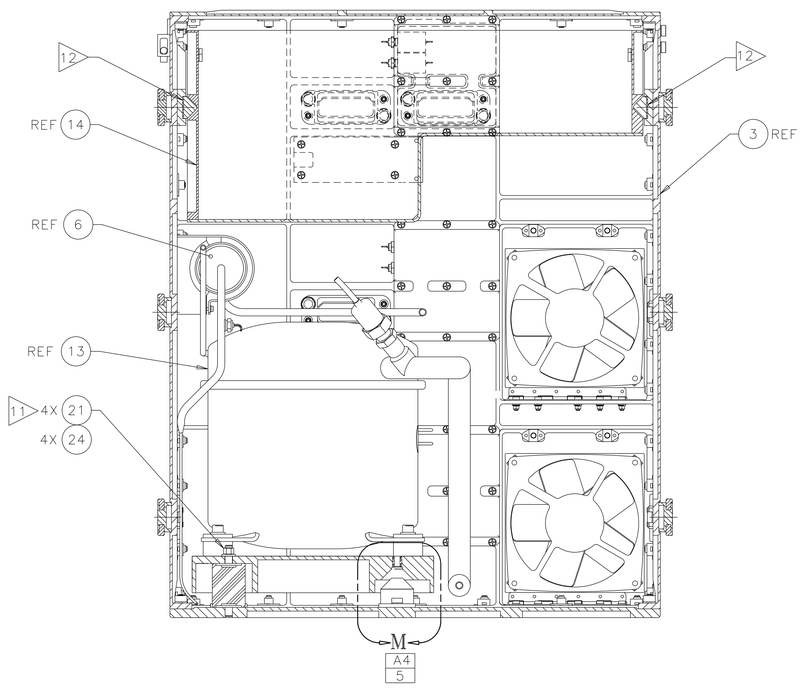

SECTION E–E [E2/4]

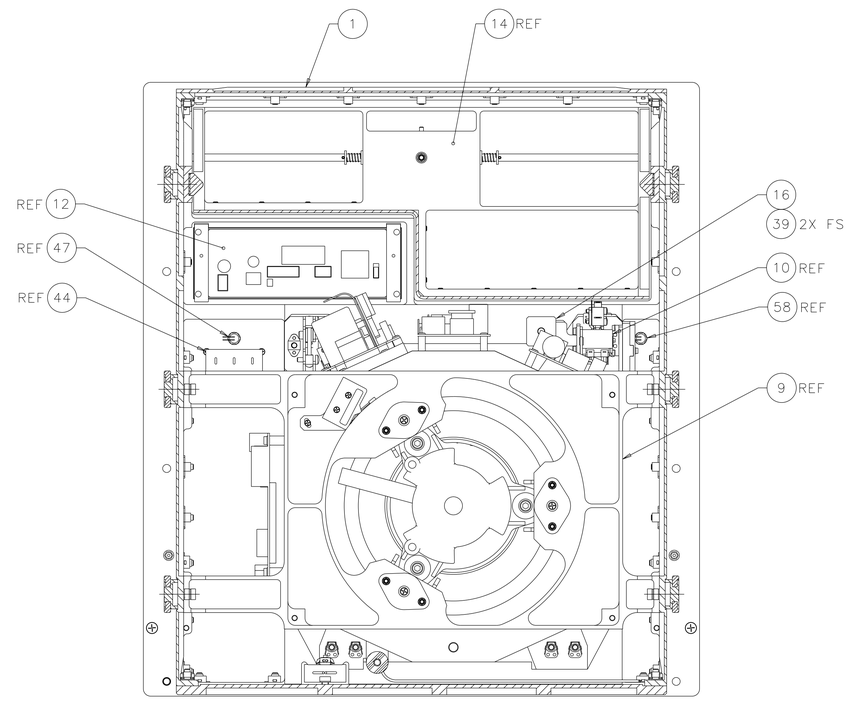

SECTION K–K [E6/4]

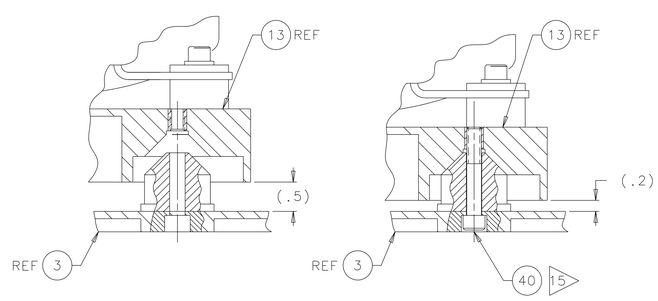

OPERATIONAL CONFIGURATION

LAUNCH CONFIGURATION

DETAIL M [B6/5]
SCALE: 1/1
4X

PRELIMINARY

T. APPROVER	99/99/99						
T. QE	99/99/99						
T. MATERIALS	99/99/99						
T. STRESS	99/99/99	SIZE	CODE IDENT NO.	DWG NO.		REV	
T. AUTHORIZER	99/99/99	E	21356	SEG46117400		TST	
TEST APP	99/99/99	SCALE: 1/2	ORG EA5		SHEET 5 OF 5		

STATUS: Check for DCNs against the drawing.