REV	ZONE	DESCRIPTION OF CHANGE

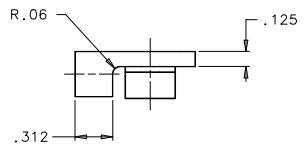

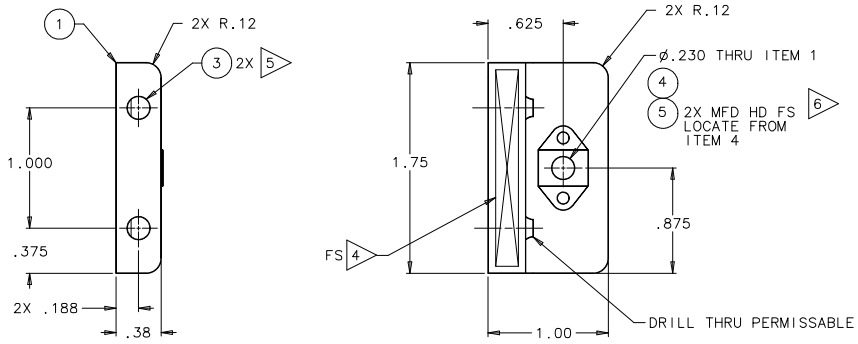

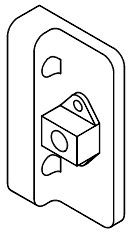

ISO VIEW
FOR REFERENCE ONLY

-301

NOT FINAL

QTY	PART NUMBER	DESCRIPTION	MATERIAL	SPECIFICATION	ITEM
AR	73X	INK, MARKING, BLACK		3	8
AR	SUPER KOROPON 515-700/910-704	EPOXY PRIMER		2	7
					6
2	MS20426AD3-5	RIVET, SOLID, CSK	2117-T4 AL ALY ø3/32 X 5/16		5
1	MS21076L3N	NUTPLATE, FLOATING, SELF-LKG, LUBE	CRES .190-32UNF-3B		4
2	MS21209F1-15L	INSERT, THREAD, SELF-LKG, LUBE	CRES .190-32UNF-3B X .285		3
					2
1	-001	CLIP	6061-T651 AL ALY 1.8 X 1.0 X .4	SAE-AMS-QQ-A-250/11	1
-	-301	CLIP ASSY			

6 INSTALL RIVETS (ITEM 5) PER NASA/JSC PRC-9001. SEAL RIVETS (ITEM 5) AND NUTPLATE (ITEM 4) PER NASA/JSC PRC-4004 USING EPOXY PRIMER (ITEM 7).

5 INSTALL HELICAL COIL INSERTS (ITEM 3) PER NASA/JSC PRC-9008. SEAL INSERTS WITH EPOXY PRIMER (ITEM 7) PER NASA/JSC PRC-4004. INSTALL THE INSERTS FROM THE SIDE INDICATED. ALL HELICAL COIL INSERTS ARE TO BE INSTALLED AS CLASS 3B.

4 PART NUMBER SHALL BE MARKED IN .12 INCH HIGH CHARACTERS BY RUBBER STAMPING USING INK (ITEM 8) PER NASA/JSC PRC-9002. LOCATE APPROXIMATELY AS SHOWN.

3 INDEPENDENT INK INC, GARDENA, CA

2 COURTAULDS AEROSPACE, GLENDALE, CA

1 ANODIZE ALL SURFACES PER NASA/JSC PRC-5006, TYPE II, CLASS 1.

FLAG NOTES:

5. THIS ASSEMBLY DOES NOT CONTAIN FRACTURE CRITICAL PARTS.
4. CLEAN ALL SURFACES TO LEVEL GC PER NASA/JSC PRC-5001; WIPE CLEAN ALL SURFACES.
3. ALL DIMENSIONS ARE IN INCHES.
2. FABRICATION PER NASA/JSC SKZ36103755, JSC FABRICATION TOLERANCES AND PRACTICES.
1. INTERPRET DRAWING PER NASA/JSC JPG 8500.4, ENGINEERING DRAWING SYSTEM MANUAL.

NOTES: UNLESS OTHERWISE SPECIFIED

UNLESS NOTED OTHERWISE DIM ARE IN INCHES, TOL ARE: .0 ± .1 .00 ± .02 .000 ± .005 ANGULAR ± .5°
SURFACE FINISH IN MICROINCHES RMS UNLESS NOTED OTHERWISE 125✓
FRACTURE CRITICAL ☐ YES ☒ NO
NEXT ASSY SEG46119580
PROJECT: HRF MARES RACK
LIBRARY: DRAWER
☒ FLT HDWR ☐ APPLICABLE QSE
☐ OTHER (SPECIFY) _____

SIGNATURES		DATE
DR	J.L. GLASGOW	03/10/8
ENG	J. FOX	03/10/21
CH	H. LUDL	03/10/21
APP		
QE		
MATL		
STRESS		
AUTH		

NATIONAL AERONAUTICS AND SPACE ADMINISTRATION
LYNDON B. JOHNSON SPACE CENTER HOUSTON, TEXAS

CLIP ASSEMBLY, UTILITY CLOSEOUT PANEL/SLIDE GUIDE, RACK-

PROJECT B132 HRF MARES RACK

SIZE D | CODE ID NO. 21356 | DWG NO. SDG46119999 | REV

SCALE: 2/1 | ORG EB | FMT S01MAR01 | SHEET 1 OF 1