REV	ZONE	DESCRIPTION OF CHANGE
NC	C3	1. DELETED SECTION B-B.
	C8	2. DELETED .250 DIM.
	C7	3. DELETED .781 DIM.
	C7	4. DELETED 3.594 DIM.
	C7	5. DELETED 4.125 DIM.
	C6	6. DELETED 6X R.065.
	D7	7. DELETED (4X .130) DIM.
	C6	8. DELETED 2X ø.250+.005/-.000 2.062.
	C5	9. DELETED (.130) DIM.
	B8	10. DELETED 1.531 DIM.
	B7	11. DELETED 2X 2.187 DIM.
	B8	12. 2X 1.219 WAS 3X 1.219.
	B8	13. 2X .406 WAS 3X .406.
	B6	14. 4X ø.213 THRU WAS 6X ø.213 THRU.
	B5	15. DELETED R.06 CONSTANT.
	B4	16. DELETED (1.531) DIM.
	PL	17. DELETED EVERLUBE 620C.
	A6	18. DELETED FLAG NOTES 2 AND 3.
	TB	19. NEXT ASSEMBLY NO. WAS SEG46119552.

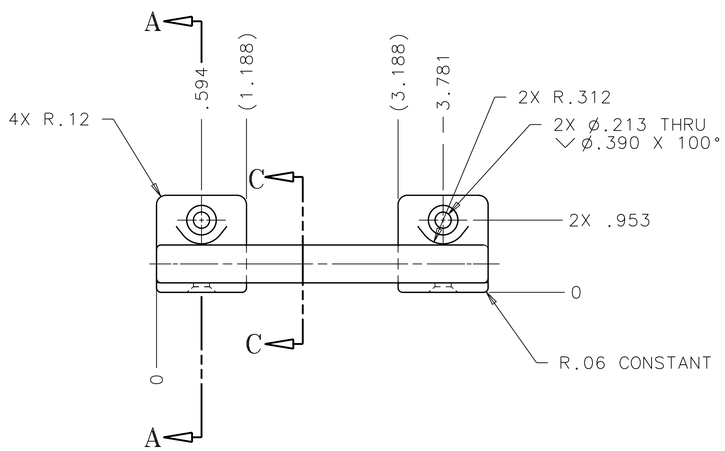

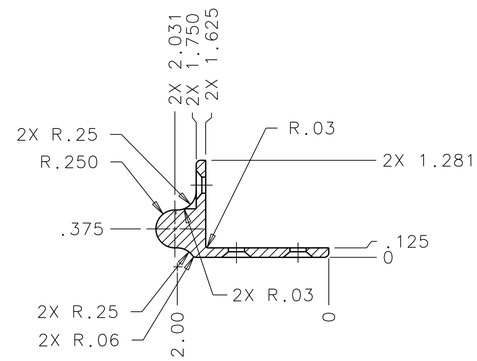

SECTION A–A

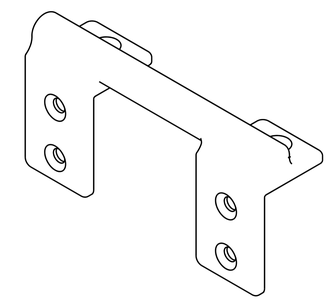

ISO VIEW
FOR REFERENCE ONLY

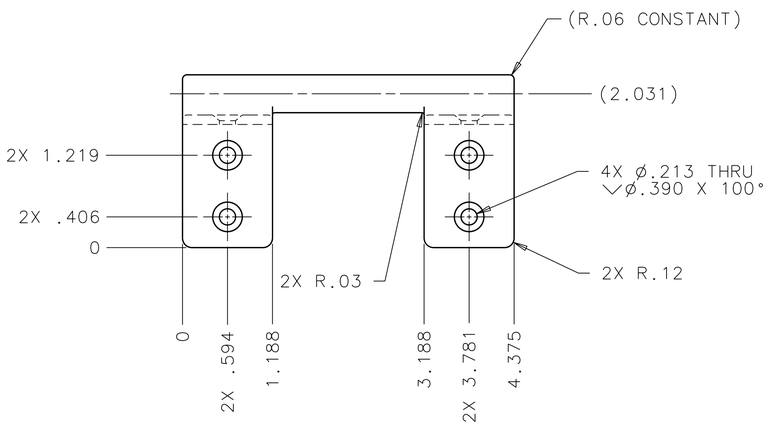

-001

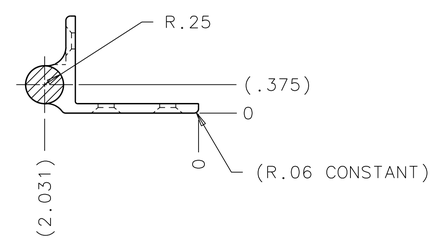

SECTION C–C

NOT FINAL

5. BAG AND TAG TO IDENTIFY PART NUMBER PER NASA/JSC PRC-9002.
4. CLEAN ALL SURFACES TO LEVEL GC PER NASA/JSC PRC-5001; WIPE CLEAN ALL SURFACES.
3. ALL DIMENSIONS ARE IN INCHES.
2. FABRICATION PER NASA/JSC SKZ36103755, JSC FABRICATION TOLERANCES AND PRACTICES.
1. INTERPRET DRAWING PER NASA/JSC JPG 8500.4, ENGINEERING DRAWING SYSTEM MANUAL.

NOTES: UNLESS OTHERWISE SPECIFIED

3 DELETED

2 DELETED

1 ANODIZE ALL SURFACES PER NASA/JSC PRC-5006, TYPE II, CLASS 1.

FLAG NOTES:

QTY	PART NUMBER	DESCRIPTION	MATERIAL	SPECIFICATION	ITEM
1	-	-001	FENCE HINGE	7075-T7351 AL ALY 1.3 X 2.3 X 4.4	SAE-AMS-QQ-A-250/12

UNLESS NOTED OTHERWISE DIM ARE IN INCHES, TOL ARE: .0 ± .1 .000 ± .005 .00 ± .02 ANGULAR ± .5°

SURFACE FINISH IN MICROINCHES RMS UNLESS NOTED OTHERWISE 125

FRACTURE CRITICAL ☐ YES ☒ NO

NEXT ASSY SEG46119536

PROJECT: HRF MARES RACK

LIBRARY: RPS SYSTEM

☒ FLT HDWR ☐ APPLICABLE GSE ☐ OTHER (SPECIFY) _____

SIGNATURES		DATE
DR	J.L. GLASGOW	03/12/02
ENG		
CH	CH Signature	CH Date
APP	APP Signature	APP Date
QE	QE Signature	QE Date
MATL	MATL Signature	MATL Date
STRESS	STRESS Signature	STRESS Date
AUTH	AUTH Signature	AUTH Date
TEST APP		STAMP Date

NATIONAL AERONAUTICS AND SPACE ADMINISTRATION
LYNDON B. JOHNSON SPACE CENTER HOUSTON, TEXAS

FENCE HINGE, VERTICAL-

PROJECT B132 HRF MARES RACK

SIZE	CODE ID NO.	DWG NO.	REV
D	21356	SDG46119599	TST

SCALE: 1/1 ORG EB FMT S01MAR01 SHEET 1 OF 1

STATUS: Check for DCNs against the drawing.