REV	ZONE	DESCRIPTION OF CHANGE
NC	FD	1. ADDED -002 AND -003 CONFIGURATIONS.
	FD	2. ADDED SECTIONS C-C AND D-D.
	FD	3. DRAWING SIZE WAS "D".

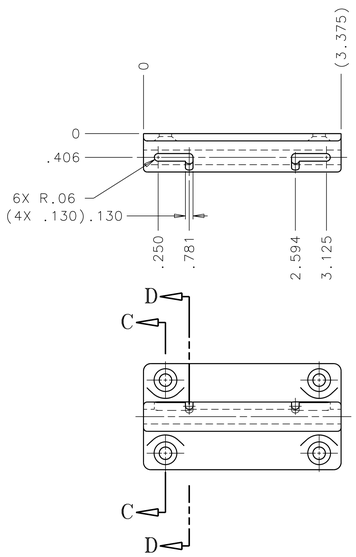

-002
SAME AS -001 EXCEPT
AS NOTED

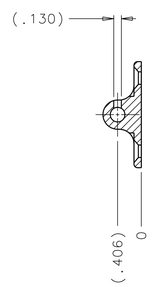

SECTION C–C

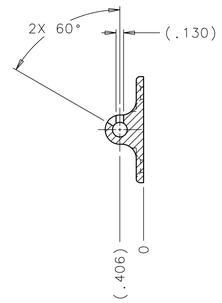

SECTION D–D

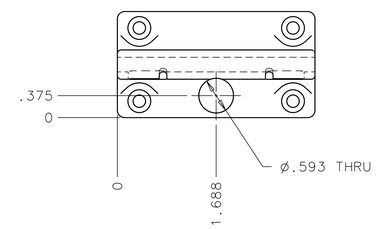

-003
SAME AS -002 EXCEPT
AS NOTED

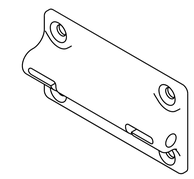

ISO VIEW -001
FOR REFERENCE ONLY

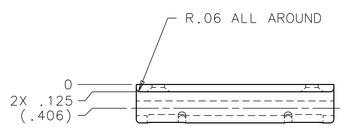

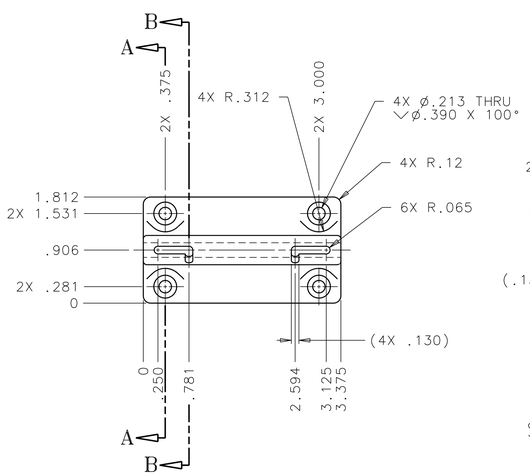

-001

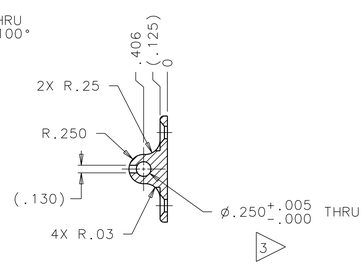

SECTION A–A

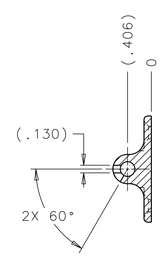

SECTION B–B

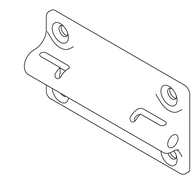

ISO VIEW -002
FOR REFERENCE ONLY

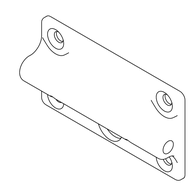

ISO VIEW -003
FOR REFERENCE ONLY

NOT FINAL

QTY	PART NUMBER	DESCRIPTION	MATERIAL	SPECIFICATION	ITEM
AR	EVERLUBE 620C	DRY FILM LUBRICANT			2
1 -	-003	FENCE HINGE	7075-T7351 AL ALY .7 X 1.9 X 3.4	SAE-AMS-QQ-A-250/12	
1 -	-002	FENCE HINGE	7075-T7351 AL ALY .7 X 1.9 X 3.4	SAE-AMS-QQ-A-250/12	
1 -	-001	FENCE HINGE	7075-T7351 AL ALY .7 X 1.9 X 3.4	SAE-AMS-QQ-A-250/12	

UNLESS NOTED OTHERWISE DIM ARE IN INCHES, TOL ARE: .0 ± .1 .000 ± .005 .00 ± .02 ANGULAR ± .5°

SURFACE FINISH IN MICROINCHES RMS UNLESS NOTED OTHERWISE 125√

FRACTURE CRITICAL ☐ YES ☒ NO

NEXT ASSY SEG46119550
PROJECT: HRF MARES RACK
LIBRARY: RPS SYSTEM

☒ FLT HDWR ☐ APPLICABLE GSE
☐ OTHER (SPECIFY) _____

SIGNATURES		DATE
DR	J.L. GLASGOW	03/12/01
ENG		
CH	CH Signature	CH Date
APP	APP Signature	APP Date
QE	QE Signature	QE Date
MATL	MATL Signature	MATL Date
STRESS	STRESS Signature	STRESS Date
AUTH	AUTH Signature	AUTH Date
	TEST APP	STAMP Date

NATIONAL AERONAUTICS AND SPACE ADMINISTRATION
LYNDON B. JOHNSON SPACE CENTER HOUSTON, TEXAS

FENCE HINGE, HORIZONTAL-

PROJECT B132 HRF MARES RACK

SIZE E | CODE ID NO. 21356 | DWG NO. SDG46119598 | REV TST

SCALE: 1/1 | ORG EB | FMT SD1MAR01 | SHEET 1 OF 1

STATUS: Check for DCNs against the drawing.

5. BAG AND TAG TO IDENTIFY PART NUMBER PER NASA/JSC PRC-9002.
4. CLEAN ALL SURFACES TO LEVEL GC PER NASA/JSC PRC-5001; WIPE CLEAN ALL SURFACES.
3. ALL DIMENSIONS ARE IN INCHES.
2. FABRICATION PER NASA/JSC SKZ36103755, JSC FABRICATION TOLERANCES AND PRACTICES.
1. INTERPRET DRAWING PER NASA/JSC JPG 8500.4, ENGINEERING DRAWING SYSTEM MANUAL.

NOTES: UNLESS OTHERWISE SPECIFIED

3 APPLY EVERLUBE 620C TO NOTED HOLE ONLY AFTER ANODIZING PER NASA/JSC PRC-8001.

2 E/M CORPORATION, PEACHTREE CITY, GA

1 ANODIZE ALL SURFACES PER NASA/JSC PRC-5006, TYPE II, CLASS 1.

FLAG NOTES: