REV	ZONE	DESCRIPTION OF CHANGE
NC	C6&8	1. 4X R.25 WAS 4X R.50.
	B4	2. 2X .38 WAS 2X .50.
	C4	3. 4.25 WAS 4.50.
	PL	4. -004 MATL SIZE WAS .020 X 2.3 X 4.5.
	PL	5. -005 MATL SIZE WAS .032 X 2.3 X 4.5.
	PL	6. -006 MATL SIZE WAS .050 X 2.3 X 4.5.

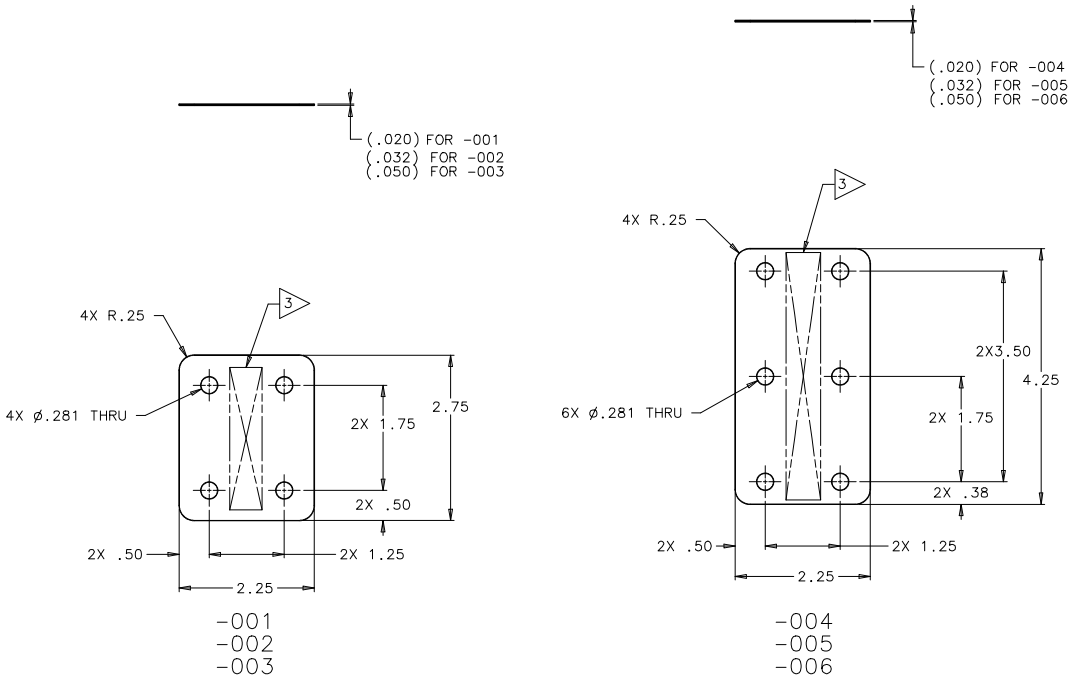

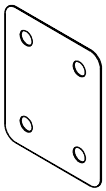

ISO VIEW -001
-002
-003
FOR REFERENCE ONLY

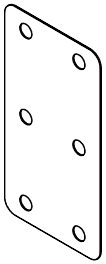

ISO VIEW -004,
-005,
-006
FOR REFERENCE ONLY

NOT FINAL

QTY	PART NUMBER	DESCRIPTION	MATERIAL	SPECIFICATION	ITEM
AR	73X	INK, MARKING, BLACK		2	
1 -	-006	SHIM, LARGE	5052-H32 AL ALY .050 X 2.3 X 4.3	AMS 4016	
1 -	-005	SHIM, LARGE	5052-H32 AL ALY .032 X 2.3 X 4.3	AMS 4016	
1 -	-004	SHIM, LARGE	5052-H32 AL ALY .020 X 2.3 X 4.3	AMS 4016	
1 -	-003	SHIM, SMALL	5052-H32 AL ALY .050 X 2.3 X 2.8	AMS 4016	
1 -	-002	SHIM, SMALL	5052-H32 AL ALY .032 X 2.3 X 2.8	AMS 4016	
1 -	-001	SHIM, SMALL	5052-H32 AL ALY .020 X 2.3 X 2.8	AMS 4016	

4. CLEAN ALL SURFACES TO LEVEL GC PER NASA/JSC PRC-5001; WIPE CLEAN ALL SURFACES.
3. ALL DIMENSIONS ARE IN INCHES.
2. FABRICATION PER NASA/JSC SKZ36103755, JSC FABRICATION TOLERANCES AND PRACTICES.
1. INTERPRET DRAWING PER NASA/JSC JPG 8500.4, ENGINEERING DRAWING SYSTEM MANUAL.

NOTES: UNLESS OTHERWISE SPECIFIED

3 PART NUMBER SHALL BE MARKED IN .12 INCH HIGH CHARACTERS BY RUBBER STAMPING USING MARKING INK PER NASA/JSC PRC-9002. LOCATE APPROXIMATELY AS SHOWN.

2 INDEPENDENT INK INC, GARDENA, CA

1 ALODINE CONVERSION COAT CLASS 1 PER NASA/JSC PRC-5005.

FLAG NOTES:

UNLESS NOTED OTHERWISE DIM ARE IN INCHES, TOL ARE: .0 ± .1 .00 ± .02 .000 ± .005 ANGULAR ± .5°

SURFACE FINISH IN MICROINCHES RMS UNLESS NOTED OTHERWISE 125√

FRACTURE CRITICAL ☐ YES ☒ NO

NEXT ASSY SEG46119585

PROJECT: HRF MARES RACK

LIBRARY: RPS SYSTEM

☒ FLT HDWR ☐ APPLICABLE QSE

☐ OTHER (SPECIFY) _____

SIGNATURES		DATE
DR	J.L. GLASGOW	03/5/19
ENG	J. FOX	03/6/6
CH	J. FALCON	03/6/6
APP		
QE		
MATL		
STRESS		
AUTH		

NATIONAL AERONAUTICS AND SPACE ADMINISTRATION

LYNDON B. JOHNSON SPACE CENTER HOUSTON, TEXAS

SHIM, RACK SUPPORT STRUCTURE-

PROJECT B132 HRF MARES RACK

SIZE D | CODE ID NO. 21356 | DWG NO. SDG46119581 | REV

SCALE: 1/1 | ORG EB | FMT S01MAR01 | SHEET 1 OF 1