REV	ZONE	DESCRIPTION OF CHANGE
NC	PL	1. ITEMS 9, 10 AND 11 WAS 8 REQD.
	PL	2. ITEMS 6, 7 AND 8 WAS 4 REQD.
	PL	3. ITEM 15 WAS 4 REQD.
	PL	4. ITEM 16 WAS 60 REQD.
	A6-1	5. REVISED FLAG NOTE 2 TO INCLUDE SERNO.
	FD	6. UPDATED PER DETAIL PART CHANGE.
	B8-1	7. ADDED FLAG NOTE 9.
	PL	8. ITEM 1 WAS SDG46119543-301.
	PL	9. ITEM 17 WAS 4 REQD.
	PL	10. ADDED ITEMS 14, 20, 24 THRU 36.
	PL	11. ITEM 19 WAS 8 REQD.

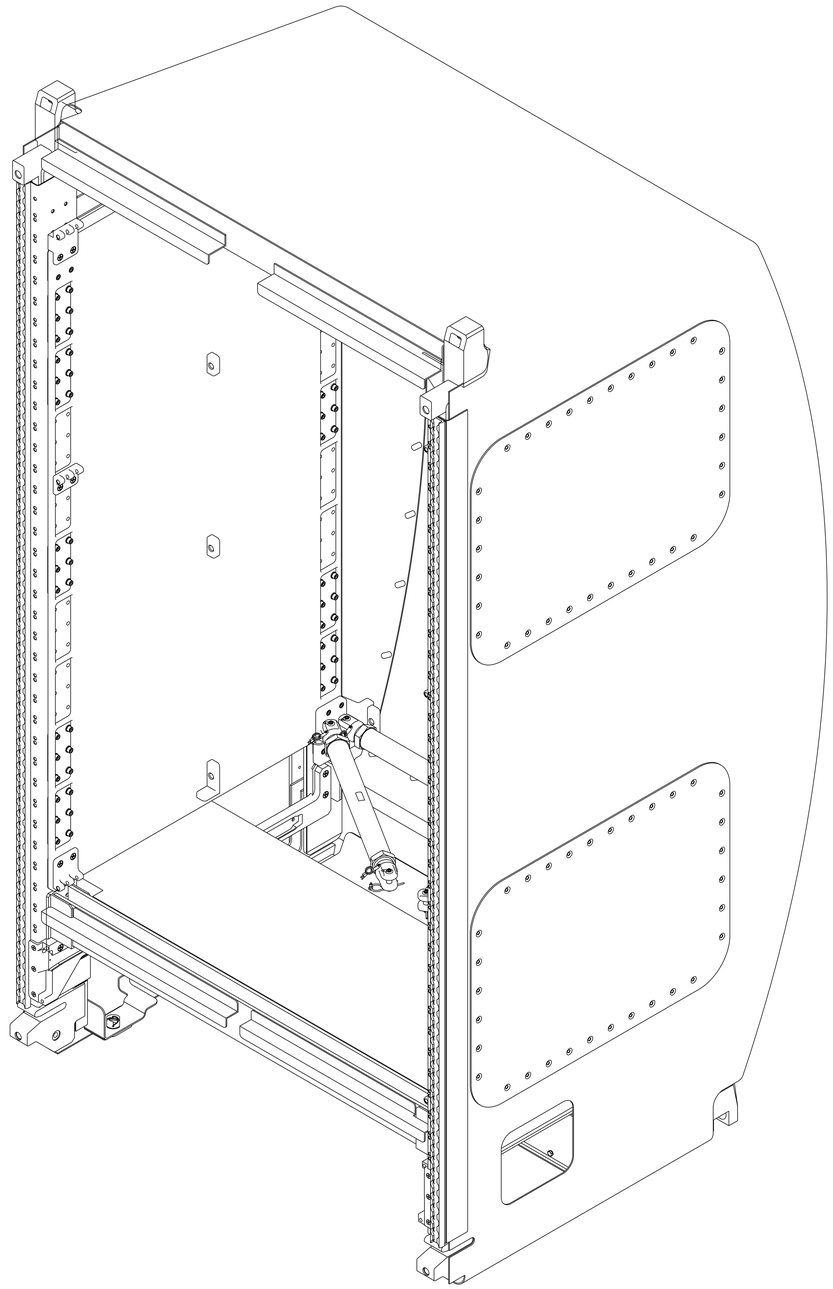

ISO VIEW
FOR REFERENCE ONLY

NOT FINAL

QTY	PART NUMBER	DESCRIPTION	MATERIAL	SPECIFICATION	ITEM
4	NAS1101E3-7	SCREW, FILH	CRES A286 .190-32UNJF-3A X .43		36
1	SDG46120066-302	ATTACH BRACKET ASSY, RH, BOT SHELF/RACK POST			35
1	SDG46120066-301	ATTACH BRACKET ASSY, RH, BOT SHELF/RACK POST			34
1	SDG46120065-302	ATTACH BRACKET ASSY, RH, MID SHELF/RACK POST			33
1	SDG46120065-301	ATTACH BRACKET ASSY, RH, MID SHELF/RACK POST			32
1	SDG46120064-302	ATTACH BRACKET ASSY, RH, TOP SHELF/RACK POST			31
1	SDG46120064-301	ATTACH BRACKET ASSY, RH, TOP SHELF/RACK POST			30
2	NAS1102E3-14	SCREW, CSK, 100°	CRES A286 .190-32UNJF-3A X .88		29
72	NAS620C10L	WASHER, FLAT	CRES NO. 10 NOMINAL		28
34	MS21043-3	NUT, HEX, SELF-LKG	CRES A286 .190-32UNF-3B		27
34	NAS6303U6	BOLT, HEX HD	CRES A286 .190-32UNF-3A		26
2	SDG46119999-301	CLIP ASSY, UTILITY CLOSEOUT PANEL			25
1	SDG46119998-001	UTILITY CLOSEOUT PANEL, RACK			24
AR	PLTM-C76	CABLE TIE		7	23
AR	222	SEALANT, THREAD		6	22
AR	73X	INK, MARKING, BLACK		1	21
2	SDG46119588-002	STRUT ATTACH BRACKET, REAR, LH			20
20	NAS1102E4-24	SCREW, CSK, 100°	CRES A286 .250-28UNJF-3A X 1.5		19
6	NAS1102E3-8	SCREW, CSK, 100°	CRES A286 .190-32UNJF-3A X .50		18
16	NAS1351N4-24	SCREW, SOC HD	CRES A286 .250-28UNRF-3A X 1.5		17
136	NAS1351N4-16	SCREW, SOC HD	CRES A286 .250-28UNRF-3A X 1.0		16
120	NAS620C416	WASHER, FLAT	CRES .250 NOMINAL		15
2	SDG46119588-001	STRUT ATTACH BRACKET, REAR, RH			14
1	SDG46119616-302	SLIDE GUIDE ASSY, RH			13
1	SDG46119616-301	SLIDE GUIDE ASSY, LH			12
AR	SDG46119581-006	SHIM, LARGE			11
AR	SDG46119581-005	SHIM, LARGE			10
AR	SDG46119581-004	SHIM, LARGE			9
AR	SDG46119581-003	SHIM, SMALL			8
AR	SDG46119581-002	SHIM, SMALL			7
AR	SDG46119581-001	SHIM, SMALL			6
2	SEG46119568-302	STRUT ASSY, LONG			5
4	SEG46119568-301	STRUT ASSY, SHORT			4
1	SEG46119555-302	SUPPORT STRUCTURE ASSY, RH			3
1	SEG46119555-301	SUPPORT STRUCTURE ASSY, LH			2
1	SDG46119543-801	MARES RACK CONFIGURATION			1
-	-301	RACK STRUCTURE ASSY			

9 REMOVE AND DISCARD EXISTING FASTENERS AND RETAIN NUTS AND WASHERS FOR REUSE. INSTALL SLIDE GUIDE ASSEMBLIES (ITEMS 12 AND 13) AND FASTENERS (ITEM 19).

FLAG NOTES:

7. APPLY TORQUE OF 25-30 INCH POUNDS ABOVE RUNNING TORQUE TO SIZE 10 FASTENERS.
6. APPLY TORQUE OF 65-75 INCH POUNDS ABOVE RUNNING TORQUE TO SIZE .250 FASTENERS.
5. THIS ASSEMBLY DOES NOT CONTAIN FRACTURE CRITICAL PARTS.
4. CLEAN ALL SURFACES TO LEVEL GC PER NASA/JSC PRC-5001; WIPE CLEAN ALL SURFACES.
3. ALL DIMENSIONS ARE IN INCHES.
2. FABRICATION PER NASA/JSC SKZ36103755, JSC FABRICATION TOLERANCES AND PRACTICES.
1. INTERPRET DRAWING PER NASA/JSC JPG 8500.4, ENGINEERING DRAWING SYSTEM MANUAL.

NOTES: UNLESS OTHERWISE SPECIFIED

8 REMOVE AND DISCARD TEMPORARY SHIPPING FASTENERS IN AREAS WHERE SUPPORT STRUCTURE ASSEMBLIES (ITEMS 2 AND 3) ATTACH TO FRONT AND REAR CORNERPOSTS OF RACK (ITEM 1).

7 PANDUIT CORP, TINLEY PARK, IL

6 LOCTITE CORP, ROCKY HILL, CT

5 ADJUST LENGTH OF STRUT (ITEM 5) TO MAINTAIN DIMENSION SHOWN. APPLY ONE DROP OF SEALANT (ITEM 22) TO EACH LOCKING NUT OF STRUT PRIOR TO TIGHTENING NUT AGAINST THE BODY OF THE STRUT. APPLY A TORQUE OF 30-50 INCH POUNDS TO EACH LOCKING NUT.

4 TEMPORARY SECURE FREE END OF STRUT (ITEM 4) TO ADJACENT STRUCTURE USING CABLE TIE (ITEM 23) TO PREVENT MOVEMENT AND DAMAGE. FREE END OF STRUT WILL BE ATTACHED AT A HIGHER LEVEL ASSEMBLY.

3 INSTALL SHIMS (ITEMS 6 THRU 11) BETWEEN RACK (ITEM 1) AND STRUCTURE (ITEM 2 AND 3) IN ANY COMBINATION TO CENTER STRUCTURE IN THE RACK AND TO OBTAIN DIMENSION SHOWN.

2 PART NUMBER AND SERNO SHALL BE MARKED IN .12 INCH HIGH CHARACTERS BY RUBBER STAMPING USING INK (ITEM 21) PER NASA/JSC PRC-9002. LOCATE APPROXIMATELY AS SHOWN. SERIAL NUMBER SHALL BE ASSIGNED BY EDCC IN ACCORDANCE WITH JPG 8500.4.

1 INDEPENDENT INK INC, GARDENA, CA

FLAG NOTES:

UNLESS NOTED OTHERWISE DIM ARE IN INCHES. TOL ARE: .0 ± .1 .000 ± .005 .00 ± .02 ANGULAR ± .5°

SURFACE FINISH IN MICROINCHES RMS UNLESS NOTED OTHERWISE

FRACTURE CRITICAL: ☐ YES ☒ NO

NEXT ASSY: SEG46119535
PROJECT: HRF MARES RACK
LIBRARY: ASSYS_LAUNCH

☒ FLT HDWR ☐ APPLICABLE OSE
☐ OTHER (SPECIFY) _____

SIGNATURES		DATE
DR	J.L. GLASGOW	03/11/18
ENG		
CH	CH Signature	CH Date
APP	APP Signature	APP Date
QE	QE Signature	QE Date
MATL	MATL Signature	MATL Date
STRESS	STRESS Signature	STRESS Date
AUTH	AUTH Signature	AUTH Date
	TEST APP	STAMP Date

NATIONAL AERONAUTICS AND SPACE ADMINISTRATION
LYNDON B. JOHNSON SPACE CENTER HOUSTON, TEXAS

RACK STRUCTURE ASSEMBLY-

PROJECT B132 HRF MARES RACK

SIZE	CODE ID NO.	DWG NO.	REV
E	21356	SEG46119580	TST

SCALE: 1/4 ORG EB FMT S01MAR01 SHEET 1 OF 3

STATUS: Check for DCNs against the drawing.

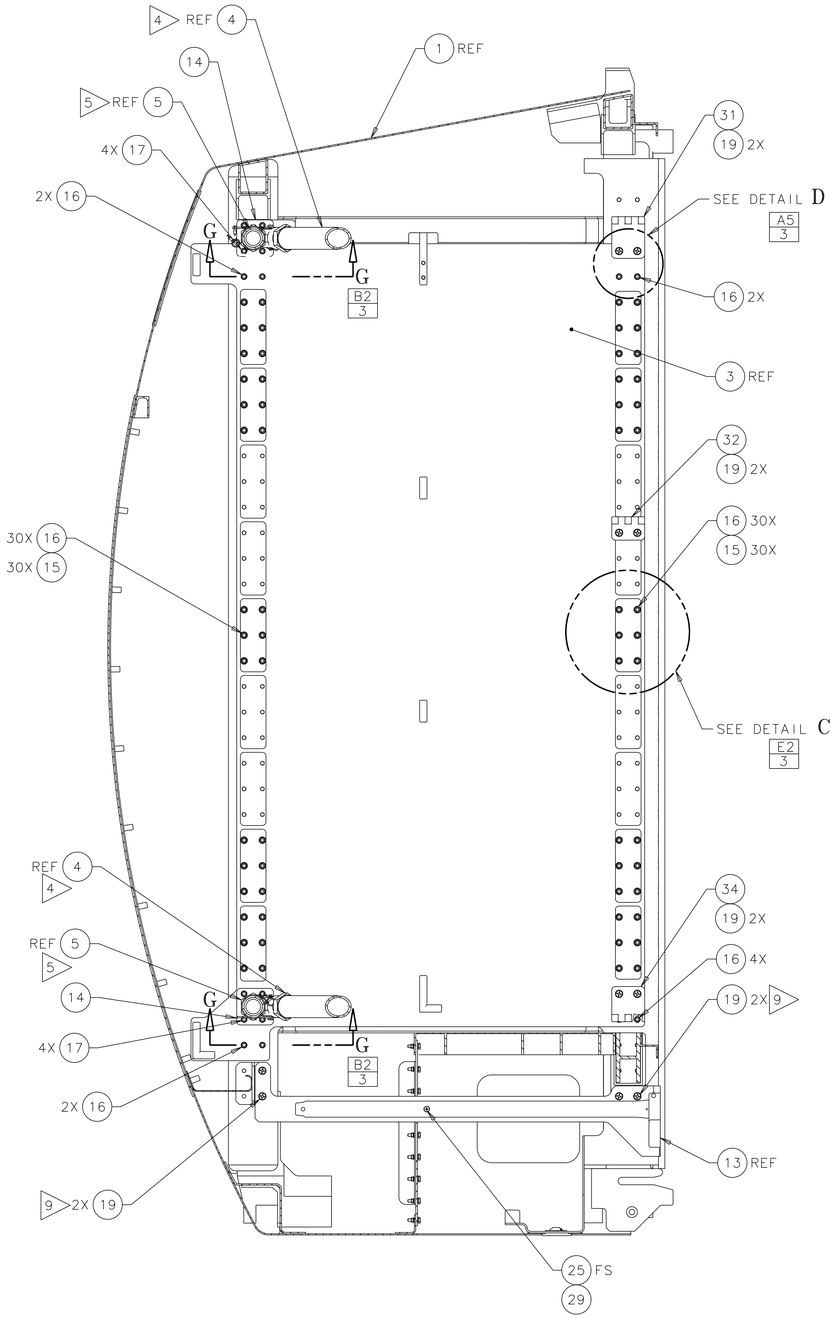

SECTION B–B B4 2

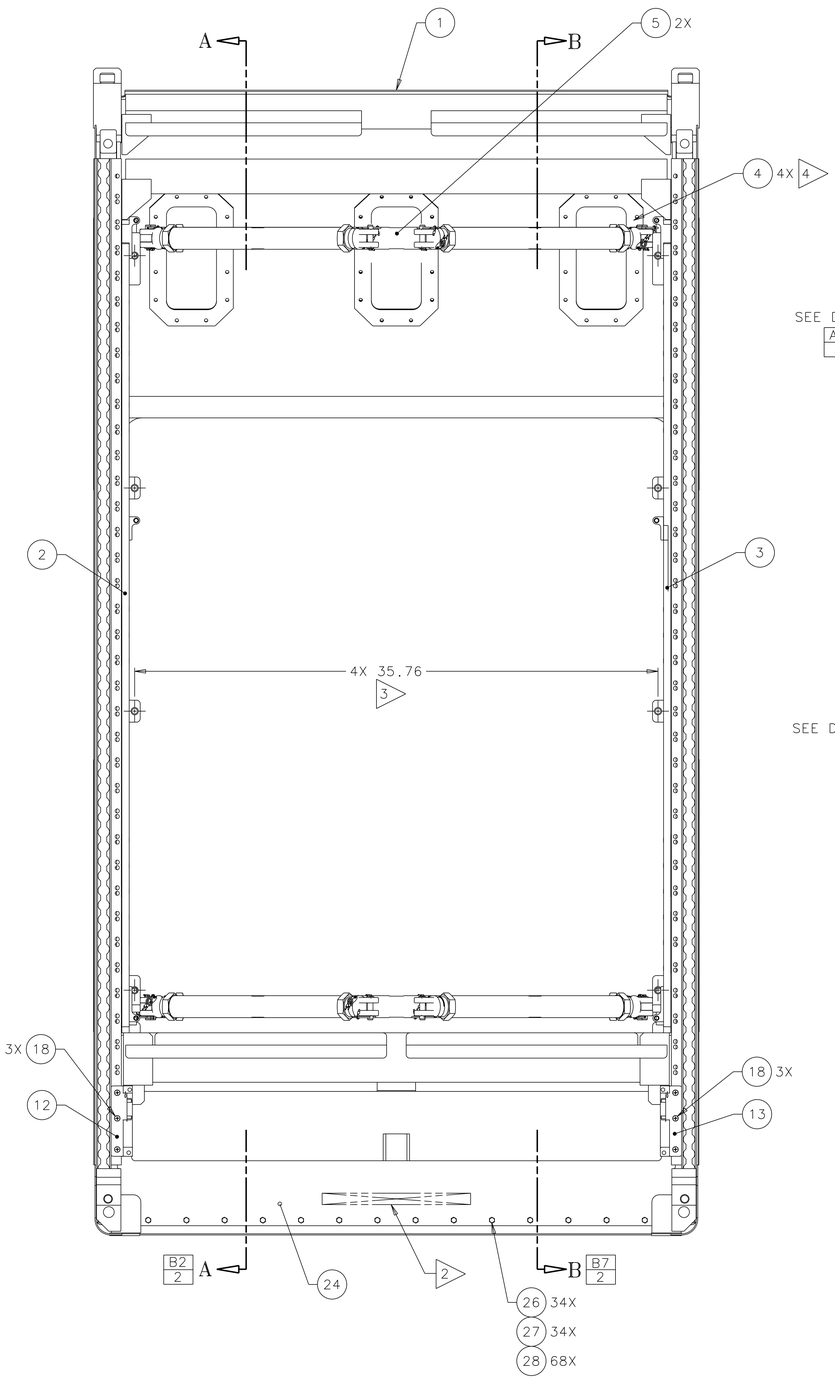

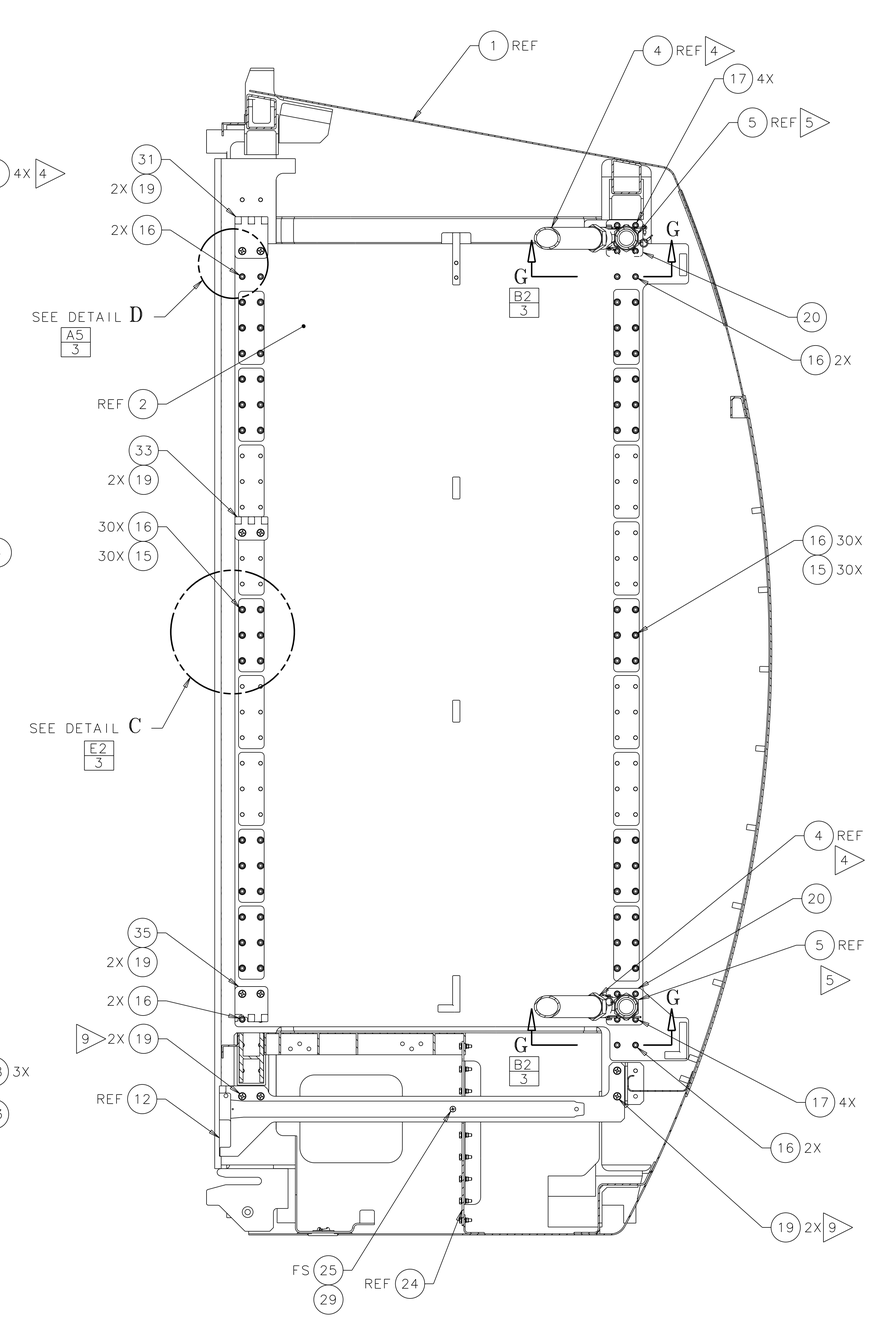

SECTION A–A B5 2

-301

NOT FINAL

SIZE	CODE IID NO.	DWG NO.	REV
E	21356	SEG46119580	TST
SCALE: 1/4	ORG EB	FMT S01MAR01	SHEET 2 OF 3

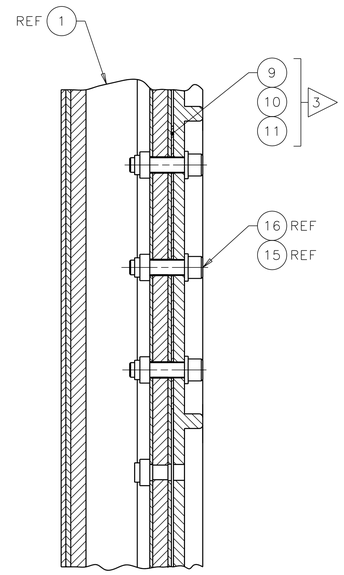

SECTION E–E F2/3
SCALE: 1/1

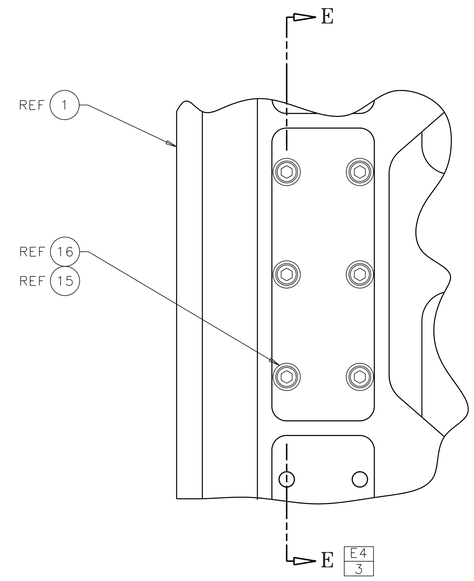

DETAIL C D3/2 D6/2 8
SCALE: 1/1
20X

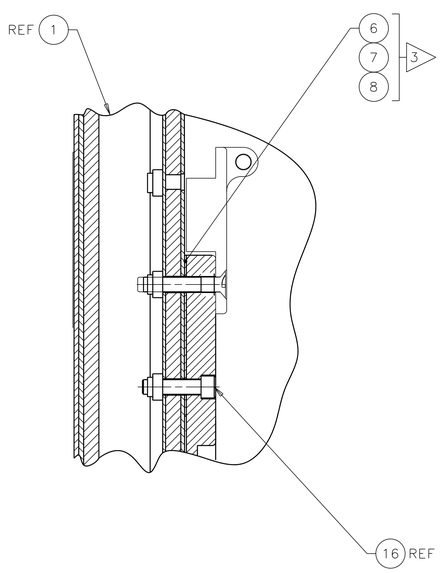

SECTION F–F A5/3
SCALE: 1/1

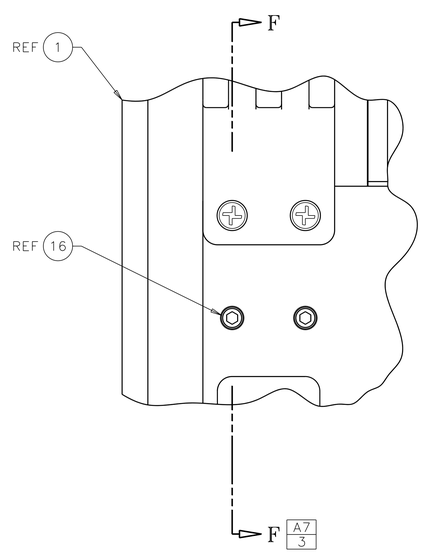

DETAIL D F3/2 F6/2 8
SCALE: 1/1
4X

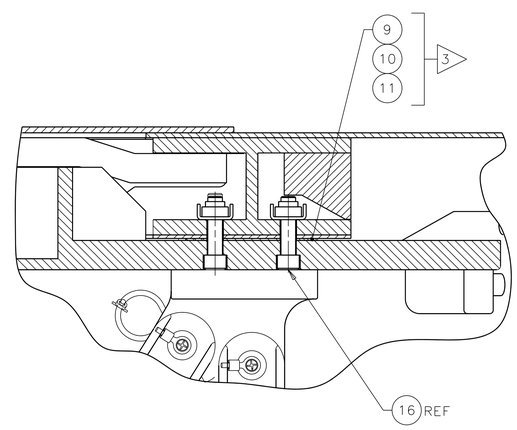

SECTION G–G F1/2 F8/2 C2/2 C7/2
SCALE: 1/1
4X

NOT FINAL

SIZE	CODE ID NO.	DWG NO.	REV
E	21356	SEG46119580	TST
SCALE: 1/4	ORG EB	FMT S01MAR01	SHEET 3 OF 3