REV	ZONE	DESCRIPTION OF CHANGE
NC	C7	1. 4.70 WAS 6.00.
	D7	2. .562 WAS .865.
	D7	3. 3.571 WAS 4.270.
	D8	4. 1.125 WAS 1.250.
	D6	5. 2X 32.2° WAS 2X 60°.
	D6	6. 2X FULL R WAS 2X R.562.
	B7	7. 2.348 WAS 3.000.
	C4	8. 2X R.06 WAS 4X R.12.
	B5	9. ADDED R.06 CONTINUOUS.
	PL	10. ITEM 1 MATERIAL SIZE WAS 1.7 X 2.1 X 6.0.

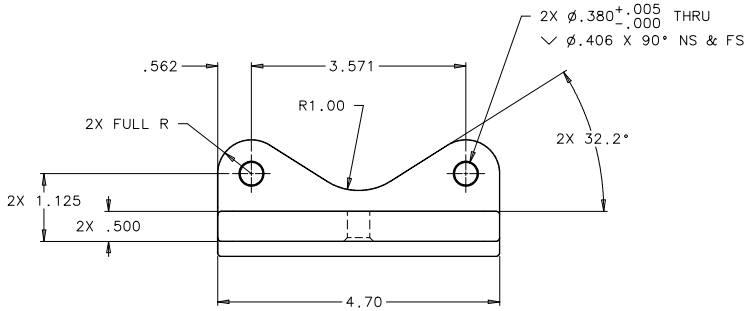

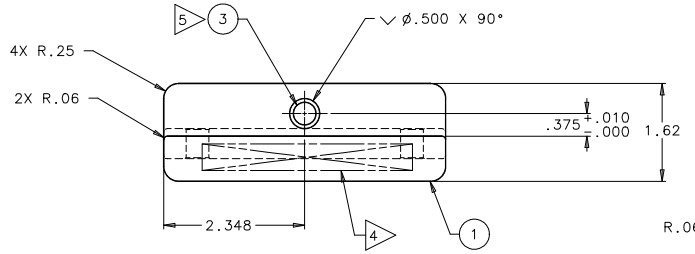

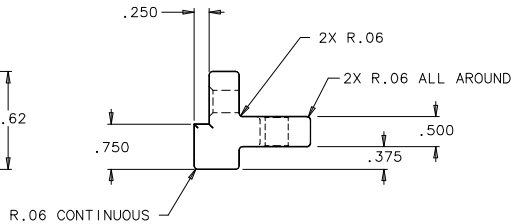

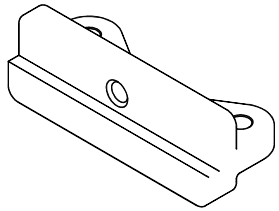

ISO VIEW
FOR REFERENCE ONLY

-301

NOT FINAL

-301	PART NUMBER	DESCRIPTION	MATERIAL	SPECIFICATION	ITEM
AR	73X	INK, MARKING, BLACK		3	6
AR	SUPER KOROPON 515-700/910-704	EPOXY PRIMER		2	5
					4
1	MS21209C60375L	INSERT, THREAD, SELF-LKG, LUBE	CRES .375-16UNC-3B X .38		3
					2
1	-001	MOUNTING PAD	6061-T651 AL ALY 4.7 X 2.0 X 1.7	SAE-AMS-QQ-A-250/11	1
-	-301	MOUNTING PAD ASSY, BOTTOM			

5. THIS ASSEMBLY DOES NOT CONTAIN FRACTURE CRITICAL PARTS.
4. CLEAN ALL SURFACES TO LEVEL GC PER NASA/JSC PRC-5001; WIPE CLEAN ALL SURFACES.
3. ALL DIMENSIONS ARE IN INCHES.
2. FABRICATION PER NASA/JSC SKZ36103755, JSC FABRICATION TOLERANCES AND PRACTICES.
1. INTERPRET DRAWING PER NASA/JSC JPG 8500.4, ENGINEERING DRAWING SYSTEM MANUAL.

NOTES: UNLESS OTHERWISE SPECIFIED

5 INSTALL HELICAL COIL INSERTS (ITEM 3) PER NASA/JSC PRC-9008. SEAL INSERTS WITH EPOXY PRIMER (ITEM 5) PER NASA/JSC PRC-4004. INSTALL THE INSERTS FROM THE SIDE INDICATED. ALL HELICAL COIL INSERTS ARE TO BE INSTALLED AS CLASS 3B.

4 PART NUMBER SHALL BE MARKED IN .12 INCH HIGH CHARACTERS BY RUBBER STAMPING USING INK (ITEM 6) PER NASA/JSC PRC-9002. LOCATE APPROXIMATELY AS SHOWN.

3 INDEPENDENT INK INC, GARDENA, CA

2 COURTAULDS AEROSPACE, GLENDALE, CA

1 ANODIZE ALL SURFACES PER NASA/JSC PRC-5006, TYPE II, CLASS 1.

FLAG NOTES:

UNLESS NOTED OTHERWISE DIM ARE IN INCHES, TOL ARE: .0 ± .1 .00 ± .02 .000 ± .005 ANGULAR ± .5°

SURFACE FINISH IN MICROINCHES RMS UNLESS NOTED OTHERWISE 125

FRACTURE CRITICAL ☐ YES ☒ NO

NEXT ASSY SEG46119549

PROJECT: HRF MARES RACK

LIBRARY: RPS SYSTEM

☒ FLT HDWR ☐ APPLICABLE QSE

☐ OTHER (SPECIFY) _____

SIGNATURES		DATE
DR	J.L. GLASGOW	03/10/23
ENG		
CH		
APP		
QE		
MATL		
STRESS		
AUTH		

NATIONAL AERONAUTICS AND SPACE ADMINISTRATION
LYNDON B. JOHNSON SPACE CENTER HOUSTON, TEXAS

MOUNTING PAD ASSEMBLY, BOTTOM, LAUNCH/STOWAGE PLATE-

PROJECT B132 HRF MARES RACK

SIZE D | CODE ID NO. 21356 | DWG NO. SDG46119573 | REV

SCALE: 1/1 | ORG EB | FMT S01MAR01 | SHEET 1 OF 1