| REV | ZONE | DESCRIPTION OF CHANGE |
|---|---|---|
| NC | FD | 1. UP-DATED PER DETAIL CHANGES. |
| | PL | 2. DELETED ITEM 12. |
| | A6 | 3. DELETED FLAG NOTE 2. |
| | PL | 4. ADDED ITEM 7. |
| | TB | 5. NEXT ASSEMBLY NO. WAS SEG46119555. |

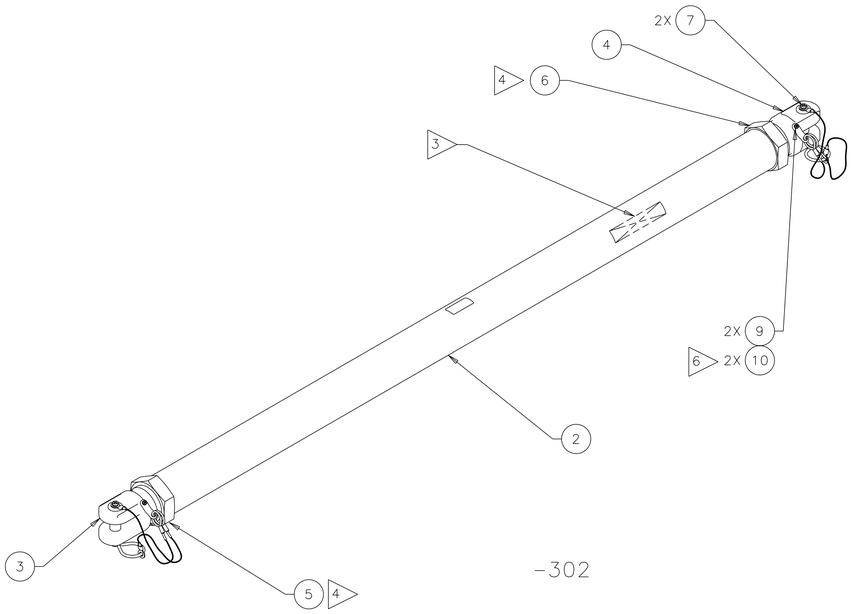


-302

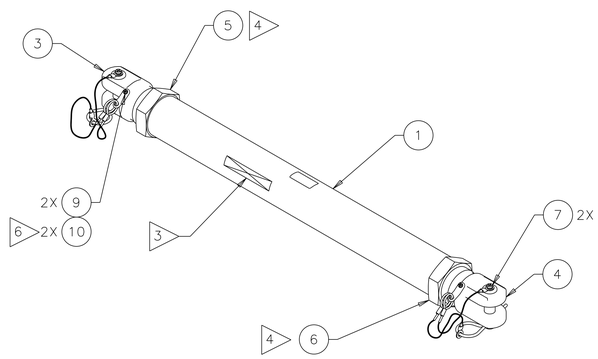


-301

# NOT FINAL

| -302 | -301 | PART NUMBER | DESCRIPTION | MATERIAL | SPECIFICATION | ITEM |
|---|---|---|---|---|---|---|
| AR | AR | 222 | THREAD SEALANT | | 5 | 14 |
| AR | AR | 73X | INK, MARKING, BLACK | | 1 | 13 |
| | | DELETED | | | | 12 |
| | | | | | | 11 |
| 2 | 2 | NAS1101E02-4 | SCREW, FILH | CRES A286 .086-56UNJC-3A X .25 | | 10 |
| 2 | 2 | NAS620C2 | WASHER, FLAT | CRES NO. 2 NOMINAL | | 9 |
| | | | | | | 8 |
| 2 | 2 | SEG46120068-301 | CLEVIS PIN ASSY | | | 7 |
| 1 | 1 | SDG46119572-002 | STRUT NUT, RH | | | 6 |
| 1 | 1 | SDG46119572-001 | STRUT NUT, LH | | | 5 |
| 1 | 1 | SDG46119571-002 | STRUT FITTING, RH | | | 4 |
| 1 | 1 | SDG46119571-001 | STRUT FITTING, LH | | | 3 |
| 1 | | SDG46119570-002 | STRUT, LONG | | | 2 |
| | 1 | SDG46119570-001 | STRUT, SHORT | | | 1 |
| | | | | | | |
| | | | | | | |
| - | | -302 | STRUT ASSY, LONG | | | |
| | - | -301 | STRUT ASSY, SHORT | | | |

7. ASSEMBLE LEFT HAND THREADED PARTS WITH LEFT HAND THREADED MATING PARTS AND RIGHT HAND THREADED PARTS WITH RIGHT HAND THREADED MATING PARTS.
6. APPLY TORQUE OF 16-19 INCH OUNCES ABOVE RUNNING TORQUE TO SIZE 2 SCREWS.
5. THIS ASSEMBLY DOES NOT CONTAIN FRACTURE CRITICAL PARTS.
4. CLEAN ALL SURFACES TO LEVEL GC PER NASA/JSC PRC-5001; WIPE CLEAN ALL SURFACES.
3. ALL DIMENSIONS ARE IN INCHES.
2. FABRICATION PER NASA/JSC SKZ36103755, JSC FABRICATION TOLERANCES AND PRACTICES.
1. INTERPRET DRAWING PER NASA/JSC JPG 8500.4, ENGINEERING DRAWING SYSTEM MANUAL.

NOTES: UNLESS OTHERWISE SPECIFIED

6 APPLY ONE DROP OF SEALANT (ITEM 14) TO SCREW THREADS PER MANUFACTURER'S INSTRUCTIONS.
5 LOCTITE CORP, ROCKY HILL, CT
4 DO NOT TORQUE STRUT NUTS (ITEM 5 AND 6).
3 PART NUMBER SHALL BE MARKED IN .12 INCH HIGH CHARACTERS BY RUBBER STAMPING USING INK (ITEM 13) PER NASA/JSC PRC-9002. LOCATE APPROXIMATELY AS SHOWN.
2 DELETED
1 INDEPENDENT INK INC, GARDENA, CA

FLAG NOTES:

UNLESS NOTED OTHERWISE DIM ARE IN INCHES, TOL ARE: .0 ± .1 .000 ± .005 .00 ± .02 ANGULAR ± .5°
SURFACE FINISH IN MICROINCHES RMS UNLESS NOTED OTHERWISE
FRACTURE CRITICAL ☐ YES ☒ NO
NEXT ASSY SEG46119580
PROJECT: HRF MARES RACK
LIBRARY: RPS SYSTEM
☒ FLT HDWR ☐ APPLICABLE GSE ☐ OTHER (SPECIFY) _____
TEST APP

| SIGNATURES | | DATE |
|---|---|---|
| DR | J.L. GLASGOW | 03/12/02 |
| ENG | | |
| CH | CH Signature | CH Date |
| APP | APP Signature | APP Date |
| QE | QE Signature | QE Date |
| MATL | MATL Signature | MATL Date |
| STRESS | STRESS Signature | STRESS Date |
| AUTH | AUTH Signature | AUTH Date |
| STAMP Date | | |

NATIONAL AERONAUTICS AND SPACE ADMINISTRATION
LYNDON B. JOHNSON SPACE CENTER HOUSTON, TEXAS

STRUT ASSEMBLY, LAUNCH/STOWAGE PLATE-

PROJECT B132 HRF MARES RACK

SIZE E | CODE ID NO. 21356 | DWG NO. SEG46119568 | REV TST
SCALE: 1/2 | ORG EB | FMT S01MAR01 | SHEET 1 OF 1

STATUS: Check for DCNs against the drawing.