REV	ZONE	DESCRIPTION OF CHANGE
NC	FD	1. UPDATED PER DETAIL PART CHANGE.
	PL	2. DELETED ITEMS 6 AND 7.
	FD	3. DELETED VIEW A-A AND VIEW B-B.
	PL	4. ITEM 11 WAS 22 REQD FOR -301 AND -302.
	B6	5. ADDED FLAG NOTES 3 AND 4.

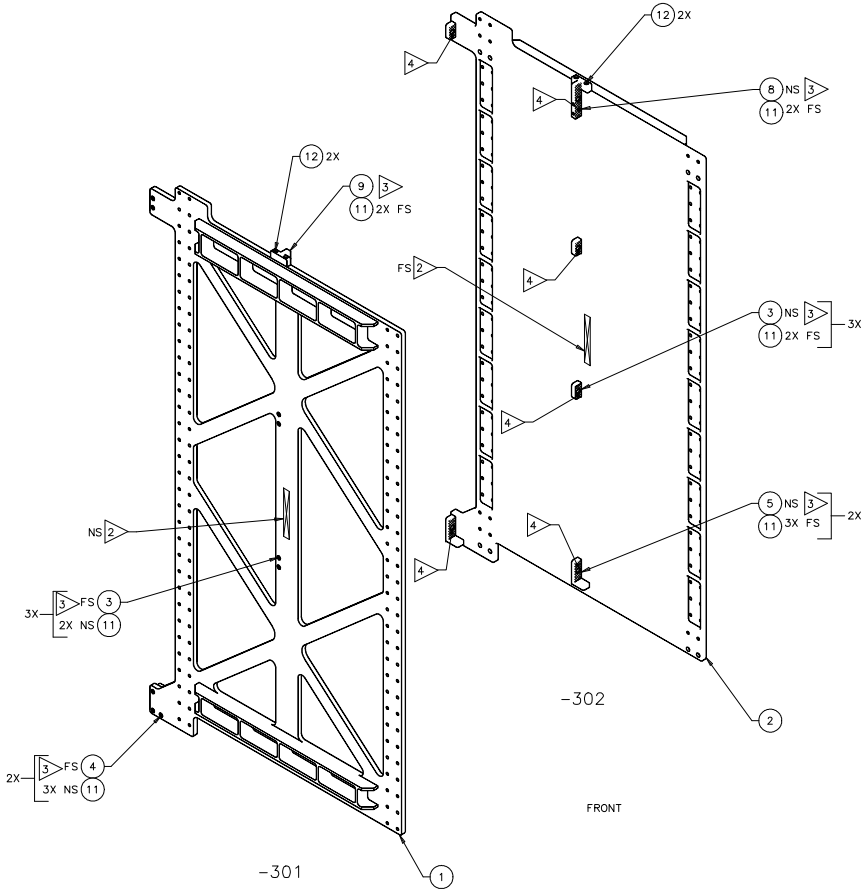

NOT FINAL

AR	AR	73X	INK, MARKING, BLACK		1	14
						13
2	2	NAS1351N4-12	SCREW, SOC HD	CRES A286 .250-28UNRF-3A X .75		12
28	28	NAS1351N4-10	SCREW, SOC HD	CRES A286 .250-28UNRF-3A X .63		11
						10
	1	SDG46119577-302	ATTACHMENT BRACKET, TOP, LH			9
1		SDG46119577-301	ATTACHMENT BRACKET, TOP, RH			8
		DELETED				7
		DELETED				6
2		SDG46119559-302	ATTACHMENT BRACKET, BOTTOM, RH			5
	2	SDG46119559-301	ATTACHMENT BRACKET, BOTTOM, LH			4
3	3	SDG46119558-301	ATTACHMENT BRACKET			3
1		SDG46119557-301	SUPPORT STRUCTURE, RH			2
	1	SDG46119556-301	SUPPORT STRUCTURE, LH			1
-		-302	SUPPORT STRUCTURE ASSY, RH			
	-	-301	SUPPORT STRUCTURE ASSY, LH			
-302	-301	PART NUMBER	DESCRIPTION	MATERIAL	SPECIFICATION	ITEM

UNLESS NOTED OTHERWISE DIM ARE IN INCHES, TOL ARE:	SIGNATURES	DATE	NATIONAL AERONAUTICS AND SPACE ADMINISTRATION
.0 ± .1 .00 ± .005 .00 ± .02 ANGULAR ± .5°	DR J.L. GLASGOW	03/11/17	LYNDON B. JOHNSON SPACE CENTER HOUSTON, TEXAS
SURFACE FINISH IN MICROINCHES AND UNLESS NOTED OTHERWISE -✓	ENG		SUPPORT STRUCTURE ASSEMBLY, LAUNCH/STOWAGE PLATE-
FRACTURE CRIT ASSY CRITICAL SEG46119580	CH		
☐ YES PROJECT:HRF MARES RACK	APP		PROJECT B132 HRF MARES RACK
☒ NO LIBRARY:RPS SYSTEM	DE		
☒ FLT HDWR ☐ APPLICABLE GSE	MATL		SIZE E CODE ID NO. 21356 DWG NO. SEG46119555 REV
☐ OTHER (SPECIFY)	STRESS		SCALE: 1/4 ORG EB FMT S01MAR01 SHEET 1 OF 1
	AUTH		

6. APPLY TORQUE OF 65-75 INCH POUNDS ABOVE RUNNING TORQUE TO .250 FASTENERS.
5. THIS ASSEMBLY DOES NOT CONTAIN FRACTURE CRITICAL PARTS.
4. CLEAN ALL SURFACES TO LEVEL GC PER NASA/JSC PRC-5001; WIPE CLEAN ALL SURFACES.
3. ALL DIMENSIONS ARE IN INCHES.
2. FABRICATION PER NASA/JSC SKZ36103755, JSC FABRICATION TOLERANCES AND PRACTICES.
1. INTERPRET DRAWING PER NASA/JSC JPG 8500.4, ENGINEERING DRAWING SYSTEM MANUAL.

NOTES: UNLESS OTHERWISE SPECIFIED

4 INDICATED SURFACES OF BRACKETS (ITEMS 3, 4, 5, 8 AND 9) TO BE ALIGNED WITHIN .015 ON THEIR RESPECTIVE ASSEMBLIES.

3 INSTALL COUNTERSUNK HOLE IN BRACKETS (ITEMS 3, 4, 5, 8 AND 9) TOWARDS THE FRONT OF SUPPORT STRUCTURES (ITEMS 1 AND 2).

2 PART NUMBER SHALL BE MARKED IN .12 INCH HIGH CHARACTERS BY RUBBER STAMPING USING INK (ITEM 14) PER NASA/JSC PRC-9002. LOCATE APPROXIMATELY AS SHOWN.

1 INDEPENDENT INK INC, GARDENA, CA

FLAG NOTES: