| REV | ZONE | DESCRIPTION OF CHANGE |
|---|---|---|
| NC | A6<br>TB | 1. REVISED FLAG NOTE 3.<br>2. NEXT ASSEMBLY NO. WAS SEG46119540. |

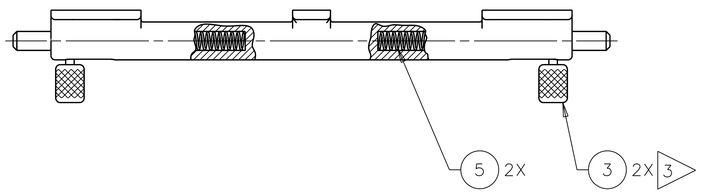


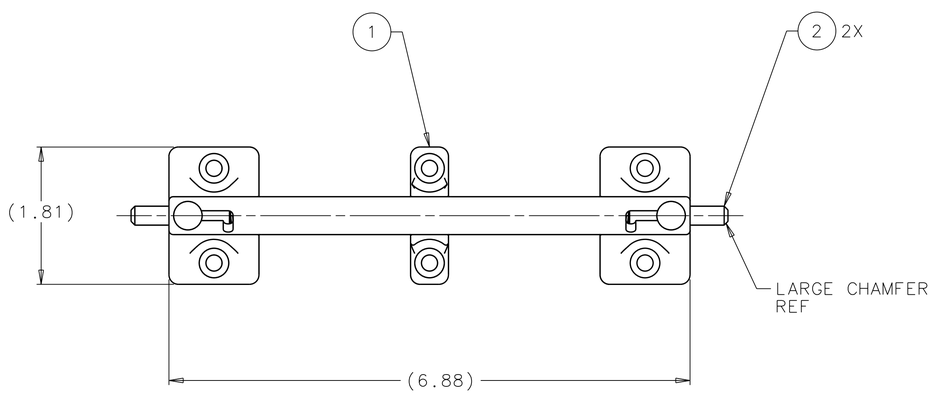


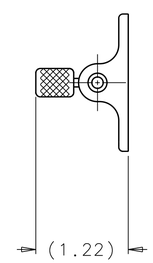


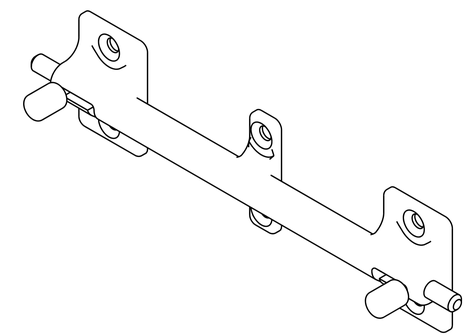

ISO VIEW
FOR REFERENCE ONLY

-301

NOT FINAL

| QTY | PART NUMBER | DESCRIPTION | MATERIAL | SPECIFICATION | ITEM |
|---|---|---|---|---|---|
| AR | 222 | SEALANT, THREAD | | 2 | 6 |
| 2 | C0240-026-2000-SS | SPRING, COMPRESSION | | 1 | 5 |
| | | | | | 4 |
| 2 | SDG46119606-001 | KNOB | | | 3 |
| 2 | SDG46119605-001 | PIVOT PIN | | | 2 |
| 1 | SDG46119596-001 | FENCE HINGE/ BELT ANCHOR | | | 1 |
| | | | | | |
| - | -301 | ATTACH BRACKET ASSY | | | |

5. BAG AND TAG TO IDENTIFY PART NUMBER PER NASA/JSC PRC-9002.
4. THIS ASSEMBLY DOES NOT CONTAIN FRACTURE CRITICAL PARTS.
3. CLEAN ALL SURFACES TO LEVEL GC PER NASA/JSC PRC-5001; WIPE CLEAN ALL SURFACES.
2. ALL DIMENSIONS ARE IN INCHES.
1. INTERPRET DRAWING PER NASA/JSC JPG 8500.4, ENGINEERING DRAWING SYSTEM MANUAL.

NOTES: UNLESS OTHERWISE SPECIFIED

3 APPLY ONE DROP OF SEALANT (ITEM 6) TO THREADS OF KNOB (ITEM 3) PRIOR TO ASSEMBLY. APPLY HAND TORQUE TO KNOB. VISUALLY VERIFY THAT THREADS ARE FULLY ENGAGED. CAUTION DO NOT ALLOW THREADED END OF KNOB TO PROTRUDE THROUGH PIVOT PIN (ITEM 2) TO PREVENT FREE MOVEMENT OF THE ASSEMBLED KNOB AND PIVOT PIN.

2 LOCTITE CORP, ROCKY HILL, CT

1 ASSOCIATED SPRING RAYMOND, CORRY, PA

FLAG NOTES:

UNLESS NOTED OTHERWISE DIM ARE IN INCHES, TOL ARE:
.0 ± .1 .000 ± .005
.00 ± .02 ANGULAR ± .5°

SURFACE FINISH IN MICROINCHES RMS UNLESS NOTED OTHERWISE -√

FRACTURE CRITICAL ☐ YES ☒ NO

NEXT ASSY SEG46119536
PROJECT: HRF MARES RACK
LIBRARY: PRS SYSTEM

☒ FLT HDWR ☐ APPLICABLE GSE
☐ OTHER (SPECIFY) _____

| SIGNATURES | | DATE |
|---|---|---|
| DR | J.L. GLASGOW | 03/12/02 |
| ENG | | |
| CH | CH Signature | CH Date |
| APP | APP Signature | APP Date |
| QE | QE Signature | QE Date |
| MATL | MATL Signature | MATL Date |
| STRESS | STRESS Signature | STRESS Date |
| AUTH | AUTH Signature | AUTH Date |
| TEST APP | | STAMP Date |

NATIONAL AERONAUTICS AND SPACE ADMINISTRATION
LYNDON B. JOHNSON SPACE CENTER HOUSTON, TEXAS

ATTACH BRACKET ASSEMBLY, FENCE, DOUBLE BELT-

PROJECT B132 HRF MARES RACK

| SIZE | CODE ID NO. | DWG NO. | REV |
|---|---|---|---|
| D | 21356 | SEG46119551 | TST |

SCALE: 1/1 ORG EB FMT S01MAR01 SHEET 1 OF 1

STATUS: Check for DCNs against the drawing.