REV	ZONE	DESCRIPTION OF CHANGE
NC	FD PL A6 B6 B8 TB	1. ADDED -302 AND -303 CONFIGURATIONS. 2. ADDED ITEMS 4, 7 AND 8. 3. REVISED FLAG NOTE 3. 4. ADDED FLAG NOTES 4 AND 5. 5. DELETED NOTE 5. 6. NEXT ASSEMBLY NO. WAS SEG46119540.

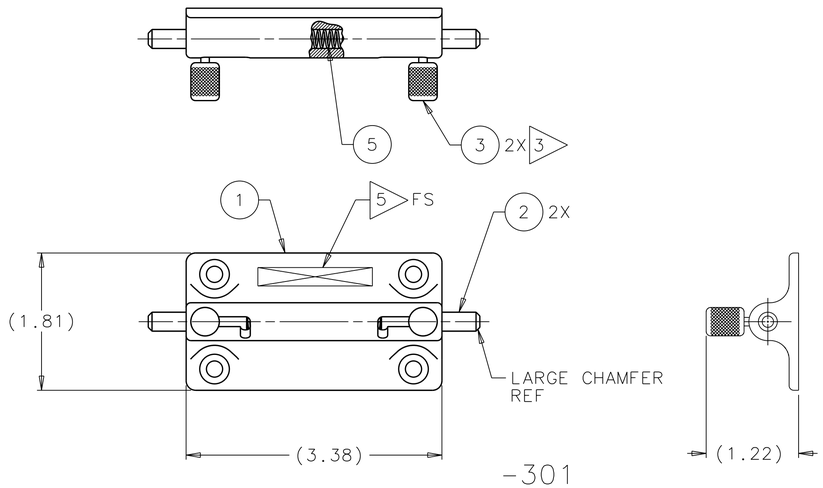

-301

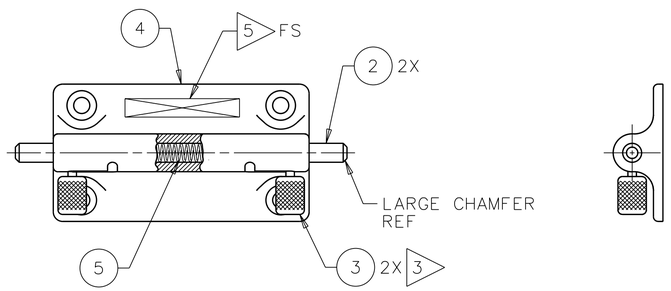

-302

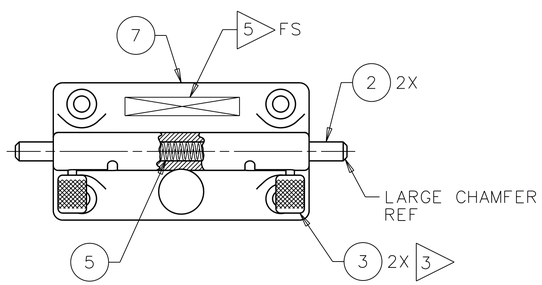

-303

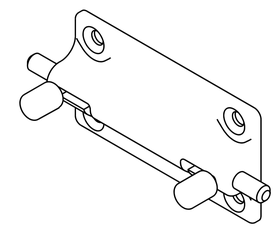

ISO VIEW -301
FOR REFERENCE ONLY

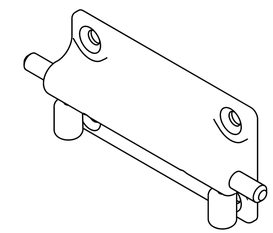

ISO VIEW -302
FOR REFERENCE ONLY

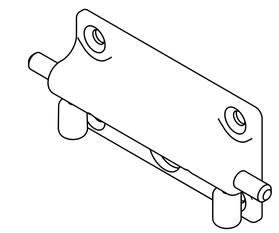

ISO VIEW -303
FOR REFERENCE ONLY

NOT FINAL

-303	-302	-301	PART NUMBER	DESCRIPTION	MATERIAL	SPECIFICATION	ITEM
AR	AR	AR	73X	INK, MARKING, BLACK		4	8
1			SDG46119598-003	FENCE HINGE, HORIZONTAL			7
AR	AR	AR	222	SEALANT, THREAD		2	6
1	1	1	C0240-026-2000-SS	SPRING, COMPRESSION		1	5
	1		SDG46119598-002	FENCE HINGE, HORIZONTAL			4
2	2	2	SDG46119606-001	KNOB			3
2	2	2	SDG46119605-001	PIVOT PIN			2
		1	SDG46119598-001	FENCE HINGE, HORIZONTAL			1
-			-303	ATTACH BRACKET ASSY			
	-		-302	ATTACH BRACKET ASSY			
		-	-301	ATTACH BRACKET ASSY			

5. DELETED

4. THIS ASSEMBLY DOES NOT CONTAIN FRACTURE CRITICAL PARTS.
3. CLEAN ALL SURFACES TO LEVEL GC PER NASA/JSC PRC-5001; WIPE CLEAN ALL SURFACES.
2. ALL DIMENSIONS ARE IN INCHES.
1. INTERPRET DRAWING PER NASA/JSC JPG 8500.4, ENGINEERING DRAWING SYSTEM MANUAL.

NOTES: UNLESS OTHERWISE SPECIFIED

5 PART NUMBER SHALL BE MARKED IN .12 INCH HIGH CHARACTERS BY RUBBER STAMPING USING INK (ITEM 8) PER NASA/JSC PRC-9002. LOCATE APPROXIMATELY AS SHOWN.

4 INDEPENDENT INK INC, GARDENA, CA

3 APPLY ONE DROP OF SEALANT (ITEM 6) TO THREADS OF KNOB (ITEM 3) PRIOR TO ASSEMBLY. APPLY HAND TORQUE TO KNOB. VISUALLY VERIFY THAT THREADS ARE FULLY ENGAGED. CAUTION DO NOT ALLOW THREADED END OF KNOB TO PROTRUDE THROUGH PIVOT PIN (ITEM 2) TO PREVENT FREE MOVEMENT OF THE ASSEMBLED KNOB AND PIVOT PIN.

2 LOCTITE CORP, ROCKY HILL, CT

1 ASSOCIATED SPRING RAYMOND, CORRY, PA

FLAG NOTES:

UNLESS NOTED OTHERWISE DIM ARE IN INCHES, TOL ARE:
.0 ± .1 .000 ± .005
.00 ± .02 ANGULAR ± .5°

SURFACE FINISH IN MICROINCHES RMS UNLESS NOTED OTHERWISE -√

FRACTURE CRITICAL ☐ YES ☒ NO

NEXT ASSY SEG46119536
PROJECT: HRF MARES RACK
LIBRARY: RPS SYSTEM

☒ FLT HDWR ☐ APPLICABLE GSE
☐ OTHER (SPECIFY) _____

SIGNATURES		DATE
DR	J.L. GLASGOW	03/12/02
ENG		
CH	CH Signature	CH Date
APP	APP Signature	APP Date
QE	QE Signature	QE Date
MATL	MATL Signature	MATL Date
STRESS	STRESS Signature	STRESS Date
AUTH	AUTH Signature	AUTH Date
TEST APP		STAMP Date

NATIONAL AERONAUTICS AND SPACE ADMINISTRATION
LYNDON B. JOHNSON SPACE CENTER HOUSTON, TEXAS

ATTACH BRACKET ASSEMBLY, FENCE, NO BELT, HORIZONTAL-

PROJECT B132 MARES RACK

SIZE D | CODE ID NO. 21356 | DWG NO. SEG46119550 | REV TST

SCALE: 1/1 | ORG EB | FMT S01MAR01 | SHEET 1 OF 1

STATUS: Check for DCNs against the drawing.