REV	ZONE	DESCRIPTION OF CHANGE
NC	FD	1. UP-DATED PER DETAIL PART CHANGE.
	PL	2. DELETED ITEM 12.
	PL	3. ITEM 21 PN WAS D43-500.
	PL	4. ITEM 22 PN WAS C0300-032-1500-SS.
	TB	5. NEXT ASSY NO. WAS SEG46119540.

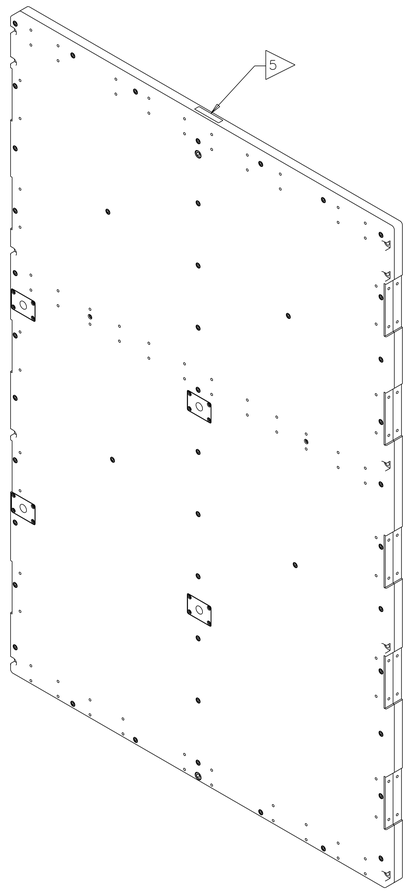

(-301)

NOT FINAL

QTY	PART NUMBER	DESCRIPTION	MATERIAL	SPECIFICATION	ITEM
AR	73X	INK, MARKING, BLACK		4	25
2	SSM-53	SPRING PLUNGER		3	24
2	NS-51	SPRING PLUNGER		3	23
1	C0300-032-1250-SS	SPRING, COMPRESSION		2	22
8	D43-437	DOWEL PIN		1	21
2	NAS1352N6-32	SCREW, SCH	CRES A286 .375-16UNRC-3A X 2.00		20
16	NAS1352NO8-5	SCREW, SCH	CRES A286 .164-32UNRC-3A X .31		19
45	NAS1351N4-16	SCREW, SCH	CRES A286 .250-28UNRF-3A X 1.00		18
2	NAS1351N3-14	SCREW, SCH	CRES A286 .190-32UNRF-3A X .88		17
3	NAS1102E08-6	SCREW, CSK, 100°	CRES A286 .164-32UNJC-3A X .38		16
1	NAS620C416L	WASHER, FLAT	CRES .250 NOMINAL		15
					14
3	SDG46119722-001	LATCH ROD CONNECTOR			13
	DELETED				12
1	SDG46119720-002	LATCH ROD, BOTTOM			11
1	SDG46119720-001	LATCH ROD, TOP			10
1	SDG46119719-001	LATCH HANDLE			9
1	SDG46119718-301	LATCH BOX ASSY			8
1	SDG46119583-002	LATCH, BOTTOM			7
1	SDG46119583-001	LATCH, TOP			6
4	SDG46119582-001	BODY, LATCH			5
1	SDG46119573-301	MOUNTING PAD ASSY, BOTTOM			4
1	SDG46119569-301	MOUNTING PAD ASSY, TOP			3
1	SDG46119537-302	LAUNCH/STOWAGE PLATE, FRONT			2
1	SDG46119537-301	LAUNCH/STOWAGE PLATE, REAR			1
-	-301	MOTOR BOX LATCH ASSY			

9. APPLY TORQUE OF 215-255 INCH POUNDS ABOVE RUNNING TORQUE TO SIZE ø.375 FASTENERS.
8. APPLY TORQUE OF 65-75 INCH POUNDS ABOVE RUNNING TORQUE TO SIZE ø.250 FASTENERS.
7. APPLY TORQUE OF 25-30 INCH POUNDS ABOVE RUNNING TORQUE TO SIZE 10 FASTENERS.
6. APPLY TORQUE OF 17-20 INCH POUNDS ABOVE RUNNING TORQUE TO SIZE 8 FASTENERS.
5. THIS ASSEMBLY DOES NOT CONTAIN FRACTURE CRITICAL PARTS.
4. CLEAN ALL SURFACES TO LEVEL GC PER NASA/JSC PRC-5001; WIPE CLEAN ALL SURFACES.
3. ALL DIMENSIONS ARE IN INCHES.
2. FABRICATION PER NASA/JSC SKZ36103755, JSC FABRICATION TOLERANCES AND PRACTICES.
1. INTERPRET DRAWING PER NASA/JSC JPG 8500.4, ENGINEERING DRAWING SYSTEM MANUAL.

NOTES: UNLESS OTHERWISE SPECIFIED

9 LOCATE SPRING PLUNGER (ITEM 24) TO RETAIN LATCH (ITEMS 6 AND 7) IN POSITION SHOWN.

8 LOCATE SPRING PLUNGER (ITEM 23) TO RETAIN HANDLE (ITEM 9) AS SHOWN.

7 MECHANICALLY STAKE DOWEL PIN (ITEM 21) IN PLACE AFTER ASSEMBLY.

6 POSITION LATCH (ITEMS 6 AND 7) AS SHOWN IN DETAIL VIEWS "C" AND "D" AFTER ASSEMBLY WITH ITEMS 5, 8, 9, 10, 11, 12 AND 13. POSITION HANDLE (ITEM 9) AS SHOWN AND LOCATE HOLE FOR LATCH ROD (ITEM 10) FROM HOLE IN HANDLE. ASSEMBLED UNITS MAY BE ROTATED FOR DRILLING AND ASSEMBLY AFTER HOLE IS LOCATED.

5 PART NUMBER SHALL BE MARKED IN .12 INCH HIGH CHARACTERS BY RUBBER STAMPING USING INK (ITEM 25) PER NASA/JSC PRC-9002. LOCATE APPROXIMATELY AS SHOWN.

4 INDEPENDENT INK INC, GARDENA, CA

3 VLIER ENGINEERING, BURBANK, CA

2 ASSOCIATED SPRING RAYMOND, CORRY, PA

1 PRECISION INDUSTRIAL COMPONENTS CORP, MIDDLEBURY, CT

FLAG NOTES:

UNLESS NOTED OTHERWISE DIM ARE IN INCHES, TOL ARE: .0 ± .1 .000 ± .005 .00 ± .02 ANGULAR ± .5°

SURFACE FINISH IN MICROINCHES RMS UNLESS NOTED OTHERWISE

FRACTURE CRITICAL ☐ YES ☒ NO

NEXT ASSY SEG46119536
PROJECT: HRF MARES RACK
LIBRARY: RPS SYSTEM

☒ FLT HDWR ☐ APPLICABLE GSE
☐ OTHER (SPECIFY) _____

SIGNATURES		DATE
DR	J.L. GLASGOW	03/10/29
ENG		
CH	CH Signature	CH Date
APP	APP Signature	APP Date
QE	QE Signature	QE Date
MATL	MATL Signature	MATL Date
STRESS	STRESS Signature	STRESS Date
AUTH	AUTH Signature	AUTH Date
	TEST APP	STAMP Date

NATIONAL AERONAUTICS AND SPACE ADMINISTRATION
LYNDON B. JOHNSON SPACE CENTER HOUSTON, TEXAS

MOTOR BOX LATCH ASSEMBLY-

PROJECT B132 HRF MARES RACK

SIZE E | CODE IDENT NO. 21356 | DWG NO. SEG46119549 | REV TST

SCALE 1/4 | ORG EB | FMT S01MAR01 | SHEET 1 OF 2

STATUS: Check for DCNs against the drawing.

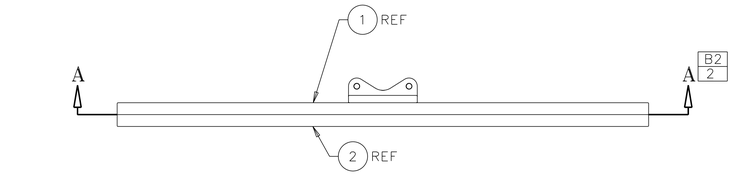

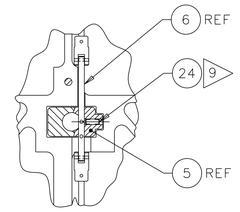

DETAIL C D3 2
SCALE: 1/2

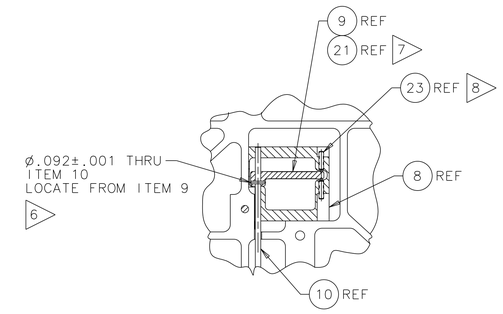

DETAIL B F3 2
SCALE: 1/2

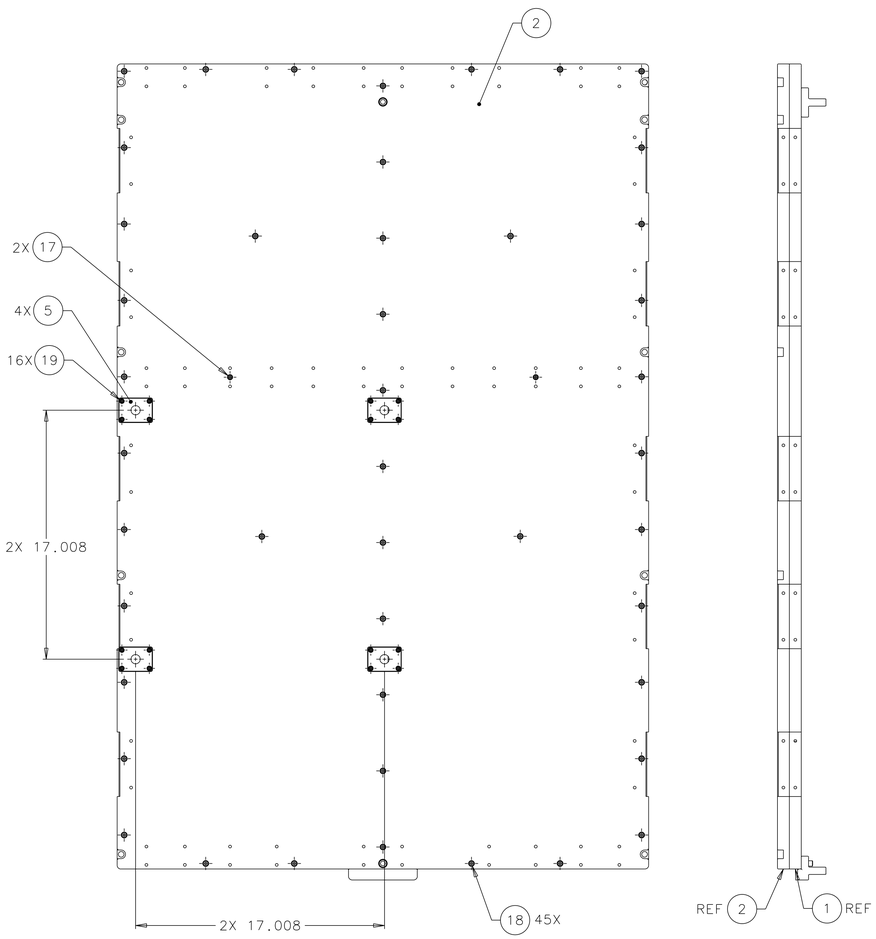

-301

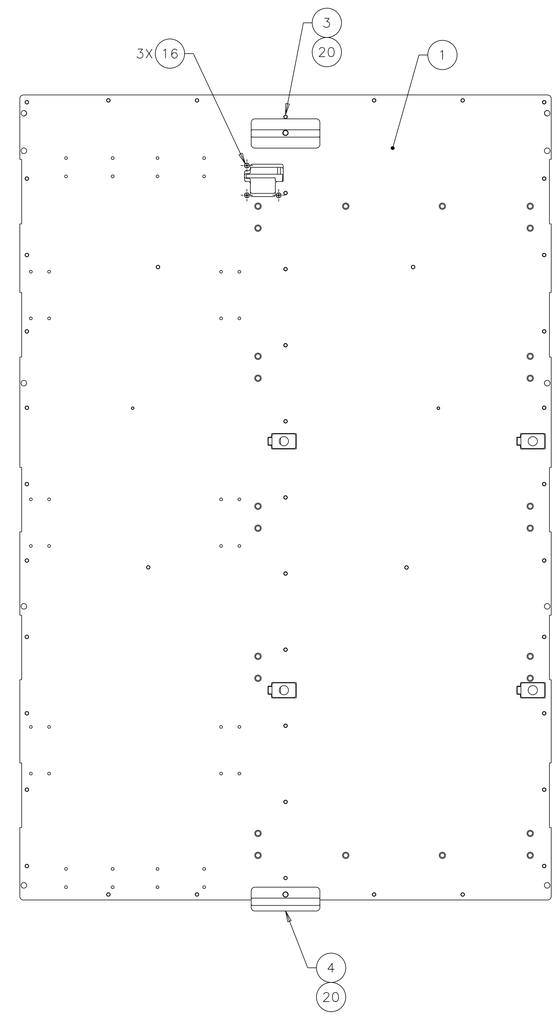

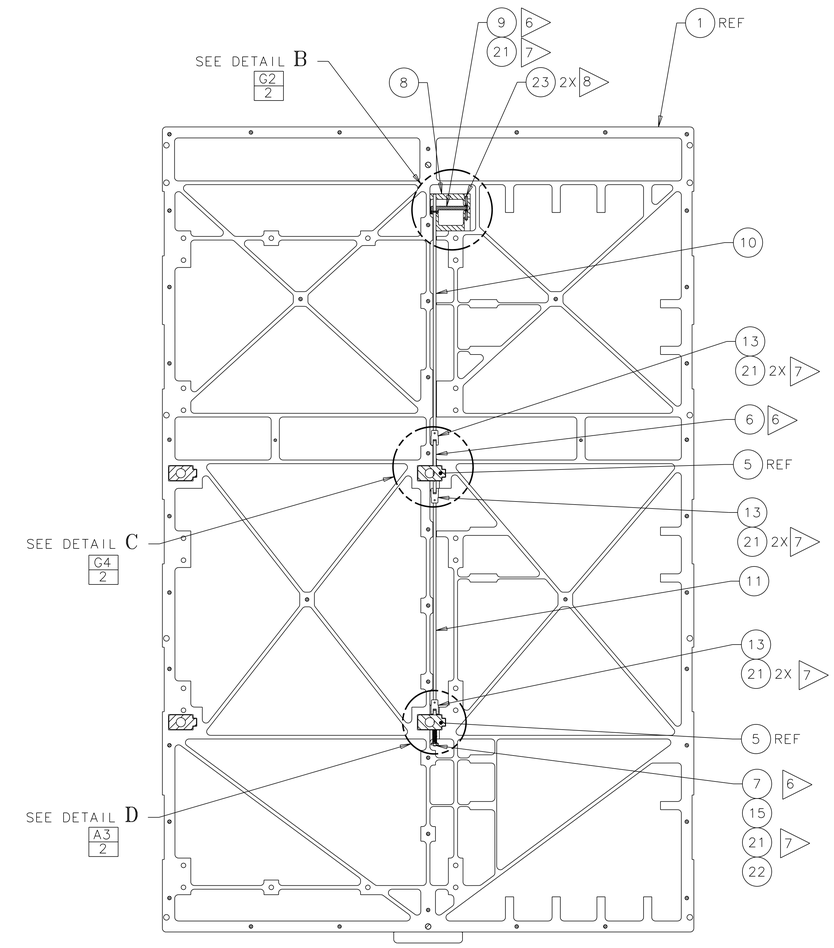

SECTION A–A G6 2

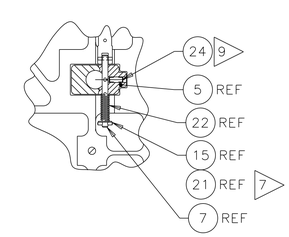

DETAIL D C3 2
SCALE: 1/2

NOT FINAL

SIZE	CODE IDENT NO.	DWG NO.	REV
E	21356	SEG46119549	TST
SCALE: 1/4	ORG EB	FMT S01MAR01	SHEET 2 OF 2