REV	ZONE	DESCRIPTION OF CHANGE
NC	FD	1. REDESIGNED PART AND REDIMENSIONED ALL VIEWS.
	PL	2. MATERIAL SIZE FOR -001 WAS .5 X 16.1 X 35.1.
	PL	3. ITEM 3 PART NUMBER WAS MS21209C0815L.
	B6-1	4. ADDED FLAG NOTE 6.

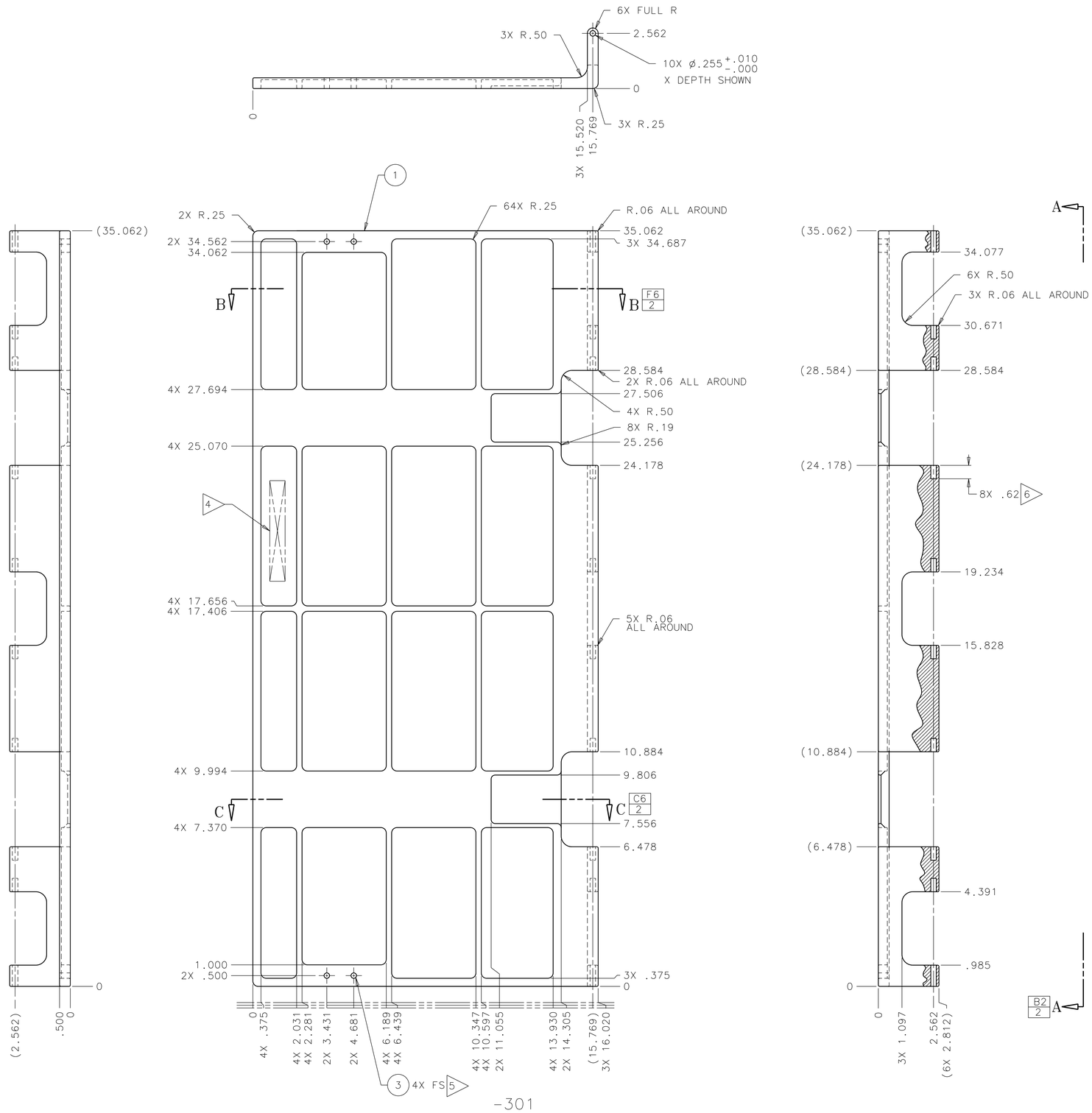

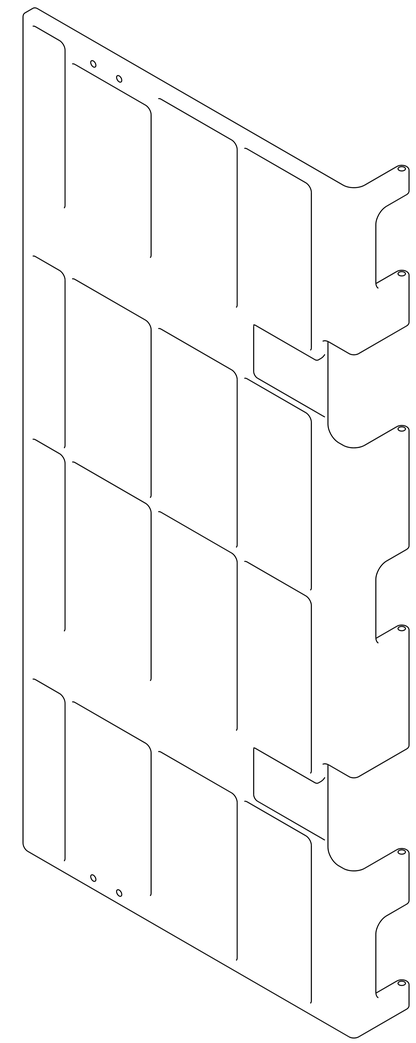

ISO VIEW
FOR REFERENCE ONLY

NOT FINAL

	AR	73X	INK, MARKING, BLACK		3	6
	AR	SUPER KOROPON 515-700/910-704	EPOXY PRIMER		2	5
						4
	4	MS21209F4-15L	INSERT, THREAD, SELF-LKG, LUBE	CRES .250-28UNF-3B X .38		3
						2
1	1	-001	FENCE, BOTTOM	7075-T7351 AL ALY 35.1 X 16.1 X 2.9	SAE-AMS-QQ-A-250/12	1
	-	-301	FENCE ASSY, HHORIZONTAL, BOTTOM			
-301	PART NUMBER		DESCRIPTION	MATERIAL	SPECIFICATION	ITEM

5. THIS ASSEMBLY DOES NOT CONTAIN FRACTURE CRITICAL PARTS.
4. CLEAN ALL SURFACES TO LEVEL GC PER NASA/JSC PRC-5001; WIPE CLEAN ALL SURFACES.
3. ALL DIMENSIONS ARE IN INCHES.
2. FABRICATION PER NASA/JSC SKZ36103755, JSC FABRICATION TOLERANCES AND PRACTICES.
1. INTERPRET DRAWING PER NASA/JSC JPG 8500.4, ENGINEERING DRAWING SYSTEM MANUAL.

NOTES: UNLESS OTHERWISE SPECIFIED

6 HOLES MAY BE DRILLED THRU. DIMENSION SHOWN IS MINIMUM DEPTH.

5 INSTALL HELICAL COIL INSERTS (ITEM 3) PER NASA/JSC PRC-9008. SEAL INSERTS WITH EPOXY PRIMER (ITEM 5) PER NASA/JSC PRC-4004. INSTALL THE INSERTS FROM THE SIDE INDICATED. ALL HELICAL COIL INSERTS ARE TO BE INSTALLED AS CLASS 3B.

4 PART NUMBER SHALL BE MARKED IN .12 INCH HIGH CHARACTERS BY RUBBER STAMPING USING INK (ITEM 6) PER NASA/JSC PRC-9002. LOCATE APPROXIMATELY AS SHOWN.

3 INDEPENDENT INK INC, GARDENA, CA

2 COURTAULDS AEROSPACE, GLENDALE, CA

1 ANODIZE ALL SURFACES PER NASA/JSC PRC-5006, TYPE II, CLASS 1.

FLAG NOTES:

UNLESS NOTED OTHERWISE DIM ARE IN INCHES, TOL ARE: .0 ± .1 .000 ± .005 .00 ± .02 ANGULAR ± .5°

SURFACE FINISH IN MICRONCHES RMS UNLESS NOTED OTHERWISE 125

FRACTURE CRITICAL ☐ YES ☒ NO

NEXT ASSY SEG46119613 PROJECT: HRF MARES RACK LIBRARY: RPS SYSTEM

☒ FLT HDWR ☐ APPLICABLE GSE ☐ OTHER (SPECIFY) _____

SIGNATURES		DATE
DR	J.L. GLASGOW	03/11/26
ENG		
CH	CH Signature	CH Date
APP	APP Signature	APP Date
QE	QE Signature	QE Date
MATL	MATL Signature	MATL Date
STRESS	STRESS Signature	STRESS Date
AUTH	AUTH Signature	AUTH Date
	TEST APP	STAMP Date

NATIONAL AERONAUTICS AND SPACE ADMINISTRATION
LYNDON B. JOHNSON SPACE CENTER HOUSTON, TEXAS

FENCE ASSEMBLY, HORIZONTAL, BOTTOM-

PROJECT B132 HRF MARES RACK

SIZE E CODE ID NO. 21356 DWG NO. SDG46119546 REV TST

SCALE: 1/2 ORG EB FMT S01MAR01 SHEET 1 OF 2

STATUS: Check for DCNs against the drawing.

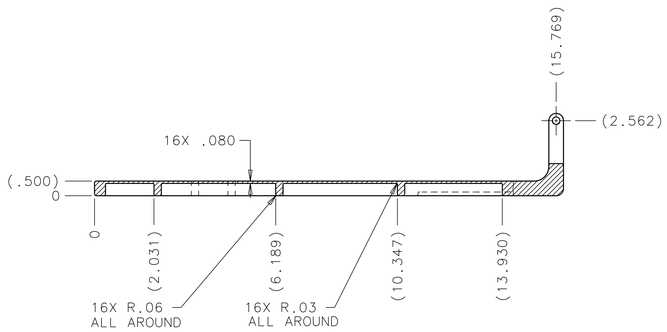

SECTION B–B G5 1

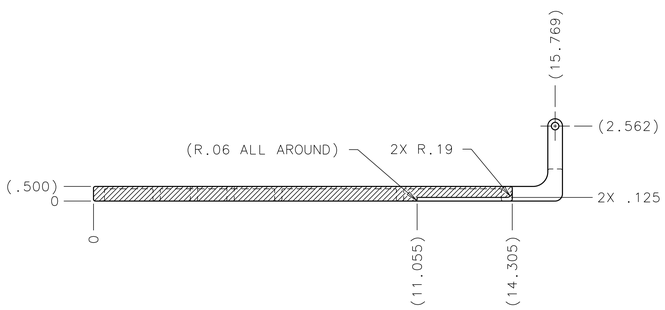

SECTION C–C D5 1

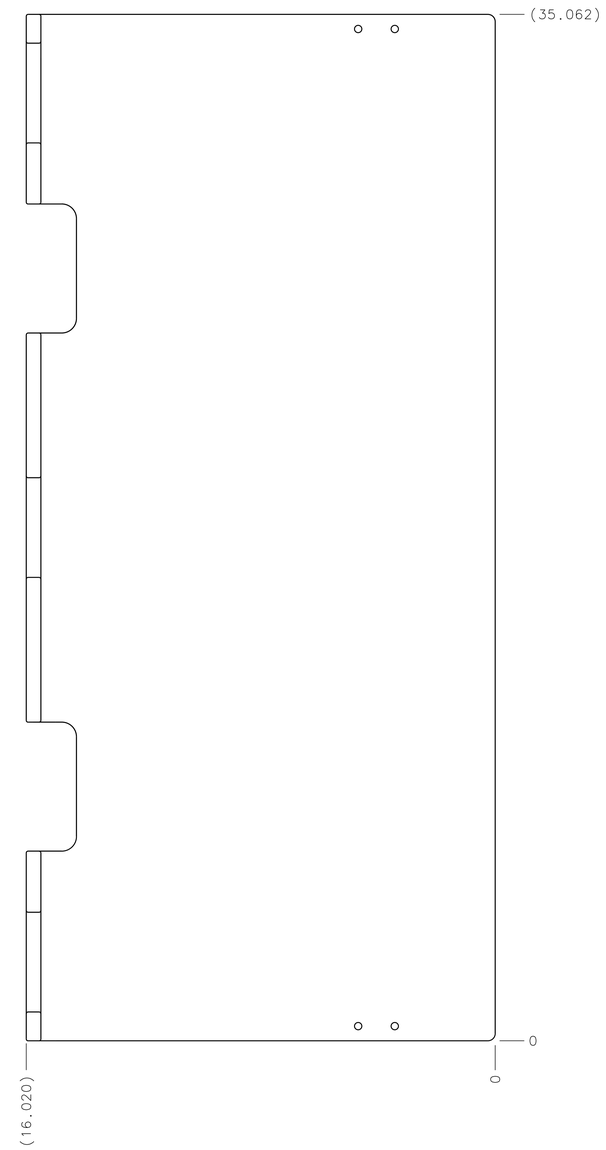

VIEW A–A C4 1

NOT FINAL

SIZE	CODE ID NO.	DWG NO.	REV
E	21356	SDG46119546	TST
SCALE: 1/2	ORG EB	FMT S01MAR01	SHEET 2 OF 2