REV	ZONE	DESCRIPTION OF CHANGE
NC	F1-2	1. 4X R.28 WAS 4X R.12.
	PL	2. ITEM 1 WAS •7075-T7351 AL ALY 10.5 X 9.0 X .5.
	PL	3. ITEM 2 WAS 21 REQD.
	B6-1	4. ADDED FLAG NOTE 7.
	B6-2	5. DELETED HOLE DIMENSIONS AND CALLOUTS FOR BOTTOM VIEW.
	FD-2	6. ADDED FINS AND SECTION A-A.

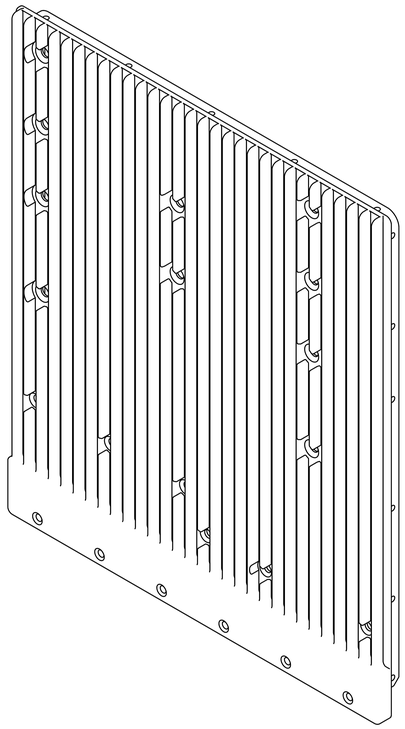

-301 ISO VIEW
FOR REFERENCE ONLY
SCALE NONE

NOT FINAL
IN REVIEW

7 ALODINE CONVERSION COAT INTERIOR SURFACES (CLASS 1) PER NASA/JSC PRC-5005.

6 NICKLE PLATE SURFACES NOTED PER NASA/JSC PRC-5004, CLASS 1, GRADE D.

5 INSTALL HELICAL COIL INSERTS (ITEM 2) PER NASA/JSC PRC-9008. SEAL INSERTS WITH EPOXY PRIMER (ITEM 3) PER NASA/JSC PRC-4004. INSTALL THE INSERTS FROM THE SIDE INDICATED. ALL HELICAL COIL INSERTS ARE TO BE INSTALLED AS CLASS 3B.

4 PART NUMBER SHALL BE MARKED IN .12 INCH HIGH CHARACTERS BY RUBBER STAMPING USING INK (ITEM 4) PER NASA/JSC PRC-9002. LOCATE APPROXIMATELY AS SHOWN.

3 INDEPENDENT INK INC, GARDENA, CA

2 COURTAULDS AEROSPACE, GLENDALE, CA

1 ANODIZE ALL SURFACES, EXCEPT AS NOTED, PER NASA/JSC PRC-5006, TYPE II, CLASS 2, COLOR BLUE 15123, PER FED-STD-595.

FLAG NOTES:

5. THIS ASSEMBLY DOES NOT CONTAIN FRACTURE CRITICAL PARTS.
4. CLEAN ALL SURFACES TO LEVEL GC PER NASA/JSC PRC-5001; WIPE CLEAN ALL SURFACES.
3. ALL DIMENSIONS ARE IN INCHES.
2. FABRICATION PER NASA/JSC SKZ36103755, JSC FABRICATION TOLERANCES AND PRACTICES.
1. INTERPRET DRAWING PER NASA/JSC JPG 8500.4, ENGINEERING DRAWING SYSTEM MANUAL.

NOTES: UNLESS OTHERWISE SPECIFIED

QTY	PART NUMBER	DESCRIPTION	MATERIAL	SPECIFICATION	ITEM
AR	73X	INK, MARKING, BLACK		3	4
AR	SUPER KOROPON 515-700/910-704	EPOXY PRIMER		2	3
16	MS21209C0410L	INSERT, HELICAL COIL	CRES .112-40UNC X .112 L		2
1	-001	COVER	7075-T7351 AL ALY 10.5 X 9.0 X .7	SAE-AMS-QQ-A-250/11	1
-	-301	COVER ASSY, POWER INTERFACE PANEL			

UNLESS NOTED OTHERWISE DIM ARE IN INCHES. TOL ARE: .0 ± .1 .000 ± .005 .00 ± .02 ANGULAR ± .5°
SURFACE FINISH IN MICROINCHES RMS UNLESS NOTED OTHERWISE 125
FRACTURE CRITICAL ☐ YES ☒ NO
NEXT ASSY SEG46119490
PROJECT: HRF MARES RACK
LIBRARY: ELECTRONICS
☒ FLT HDWR ☐ APPLICABLE GSE ☐ OTHER (SPECIFY) _____

SIGNATURES		DATE
DR	J.L. GLASGOW	03/08/20
ENG	J. FOX	03/09/10
CH	CH Signature UDL	03/09/10
APP	APP Signature	APP Date
QE	QE Signature	QE Date
MATL	MATL Signature	MATL Date
STRESS	STRESS Signature	STRESS Date
AUTH	AUTH Signature	AUTH Date
	TEST APP	STAMP Date

NATIONAL AERONAUTICS AND SPACE ADMINISTRATION
LYNDON B. JOHNSON SPACE CENTER HOUSTON, TEXAS

COVER ASSEMBLY,
POWER INTERFACE PANEL

PROJECT B132 HRF MARES RACK

SIZE E | CODE ID NO. 21356 | DWG NO. SDG46119491 | REV TST
SCALE: 1/1 | ORG EB | FMT S01MAR01 | SHEET 1 OF 2

STATUS: Check for DCNs against the drawing.

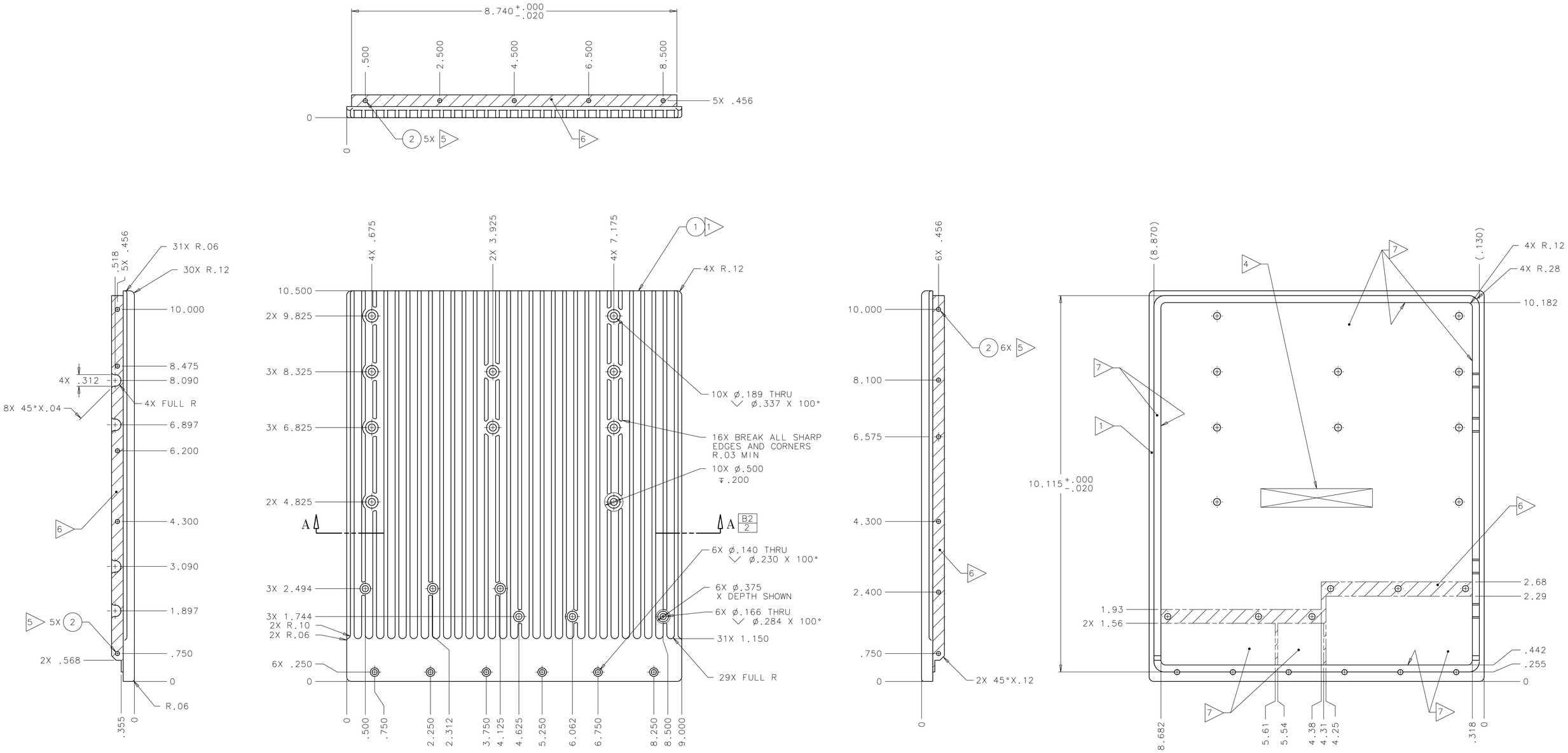

-301

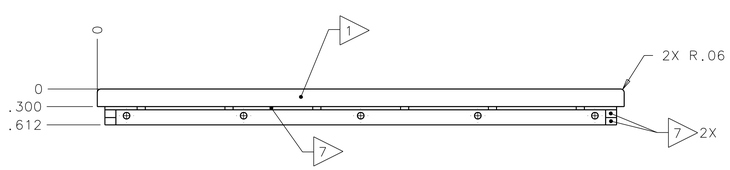

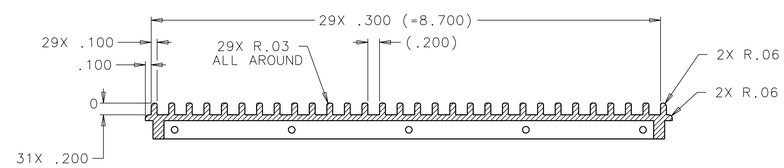

SECTION A–A E5 2

NOT FINAL
IN REVIEW

SIZE	CODE ID NO.	DWG NO.	REV
E	21356	SDG46119491	TST
SCALE: 1/1	ORG EB	FMT S01MAR01	SHEET 2 OF 2