REV	ZONE	DESCRIPTION OF CHANGE
NC	FD	REVISED AND REDRAWN.
	B6-1	1. ADDED FLAG NOTE 7.
	B4-3	2. ADDED RIBS TO BOTTOM SURFACE.
	A3-3	3. ADDED SECTION F-F.
	C7-3	4. REVISED MOUNTING HOLE LOCATIONS IN SECTION C-C.
	FD	5. ADDED SURFACE FINISH CALLOUTS.
	D6-2	6. 3.200 DIM WAS 3.375.
	FD	7. REVISED ALL VERTICAL DIMENSIONS FOR HOLES.
	PL	8. ITEM 1 WAS 7075-T7351 3.4 X 9.1 X 10.6.
	E5-2	9. ADDED SECTION G-G.
	H5-2	10. ADDED 4.375 DIM.
	D4-2	11. 2X 2.950 DIM WAS 3X 2.950.

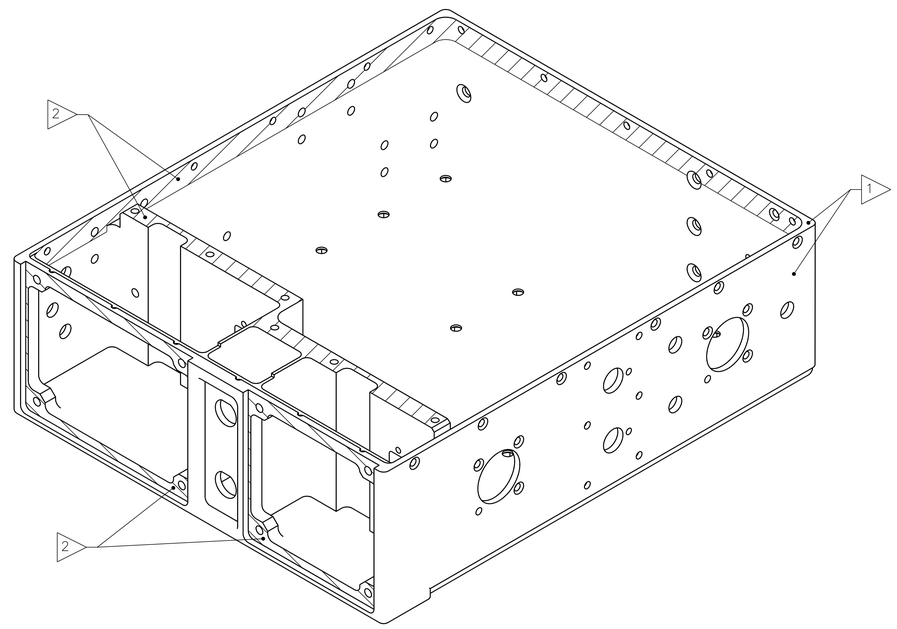

ISO VIEW
FOR REFERENCE ONLY

NOT FINAL
IN REVIEW

QTY	PART NUMBER	DESCRIPTION	MATERIAL	SPECIFICATION	ITEM
AR	73X	INK, MARKING, BLACK		4	8
AR	SUPER KOROPON 515-700/910-704	EPOXY PRIMER		3	7
					6
8	MS21209C0815L	INSERT, THREAD, SELF-LKG, LUBE	CRES .164-32UNC-3B X .246		5
6	MS21209C0615L	INSERT, THREAD, SELF-LKG, LUBE	CRES .138-32UNC-3B X .207		4
10	MS21209C0415L	INSERT, THREAD, SELF-LKG, LUBE	CRES .112-40UNC-3B X .168		3
					2
1	-001	CHASSIS	7075-T7351 AL ALY 3.2 X 9.0 X 10.5	SAE-AMS-QQ-A-250/12	1
-	-301	CHASSIS, POWER INTERFACE PANEL			

7 1 2

7 ALODINE CONVERSION COAT INTERIOR SURFACES (CLASS 1A) PER NASA/JSC PRC-5005.

6 INSTALL HELICAL COIL INSERTS (ITEMS 3, 4 AND 5) PER NASA/JSC PRC-9008. SEAL INSERTS WITH EPOXY PRIMER (ITEM 7) PER NASA/JSC PRC-4004. INSTALL THE INSERTS FROM THE SIDE INDICATED. ALL HELICAL COIL INSERTS ARE TO BE INSTALLED AS CLASS 3B.

5 PART NUMBER SHALL BE MARKED IN .12 INCH HIGH CHARACTERS BY RUBBER STAMPING USING INK (ITEM 8) PER NASA/JSC PRC-9002. LOCATE APPROXIMATELY AS SHOWN.

4 INDEPENDENT INK INC, GARDENA, CA

3 COURTAULDS AEROSPACE, GLENDALE, CA

2 NICKEL PLATE NOTED SURFACES PER NASA/JSC PRC-5004, CLASS 1, GRADE D.

1 ANODIZE ALL EXTERIOR SURFACES EXCEPT AS NOTED PER NASA/JSC PRC-5006, TYPE II, CLASS 2, COLOR BLUE 15123, PER FED-STD-595.

FLAG NOTES:

5. THIS ASSEMBLY DOES NOT CONTAIN FRACTURE CRITICAL PARTS.
4. CLEAN ALL SURFACES TO LEVEL GC PER NASA/JSC PRC-5001; WIPE CLEAN ALL SURFACES.
3. ALL DIMENSIONS ARE IN INCHES.
2. FABRICATION PER NASA/JSC SKZ36103755, JSC FABRICATION TOLERANCES AND PRACTICES.
1. INTERPRET DRAWING PER NASA/JSC JPG 8500.4, ENGINEERING DRAWING SYSTEM MANUAL.

NOTES: UNLESS OTHERWISE SPECIFIED

UNLESS NOTED OTHERWISE DIM ARE IN INCHES, TOL ARE: .0 = .1 .000 = .005 .00 = .02 ANGULAR = .5°

SURFACE FINISH IN MICROINCHES RMS UNLESS NOTED OTHERWISE 125

FRACTURE CRITICAL ☐ YES ☒ NO

NEXT ASSY SEG46119490
PROJECT: HRF MARES RACK
LIBRARY: ELECTRONICS

☒ FLT HDWR ☐ APPLICABLE GSE
☐ OTHER (SPECIFY) _____

SIGNATURES		DATE
DR	J.L. GLASGOW	03/08/15
ENG	J. FOX	03/09/15
CH	CH Signature UDL	03/09/11
APP	APP Signature	APP Date
QE	QE Signature	QE Date
MATL	MATL Signature	MATL Date
STRESS	STRESS Signature	STRESS Date
AUTH	AUTH Signature	AUTH Date
	TEST APP	STAMP Date

NATIONAL AERONAUTICS AND SPACE ADMINISTRATION
LYNDON B. JOHNSON SPACE CENTER HOUSTON, TEXAS

CHASSIS, POWER INTERFACE PANEL-

PROJECT B132 HRF MARES RACK

SIZE E | CODE ID NO. 21356 | DWG NO. SDG46119489 | REV TST

SCALE: 1/1 | ORG EB | FMT SD1MAR01 | SHEET 1 OF 3

STATUS: Check for DCNs against the drawing.

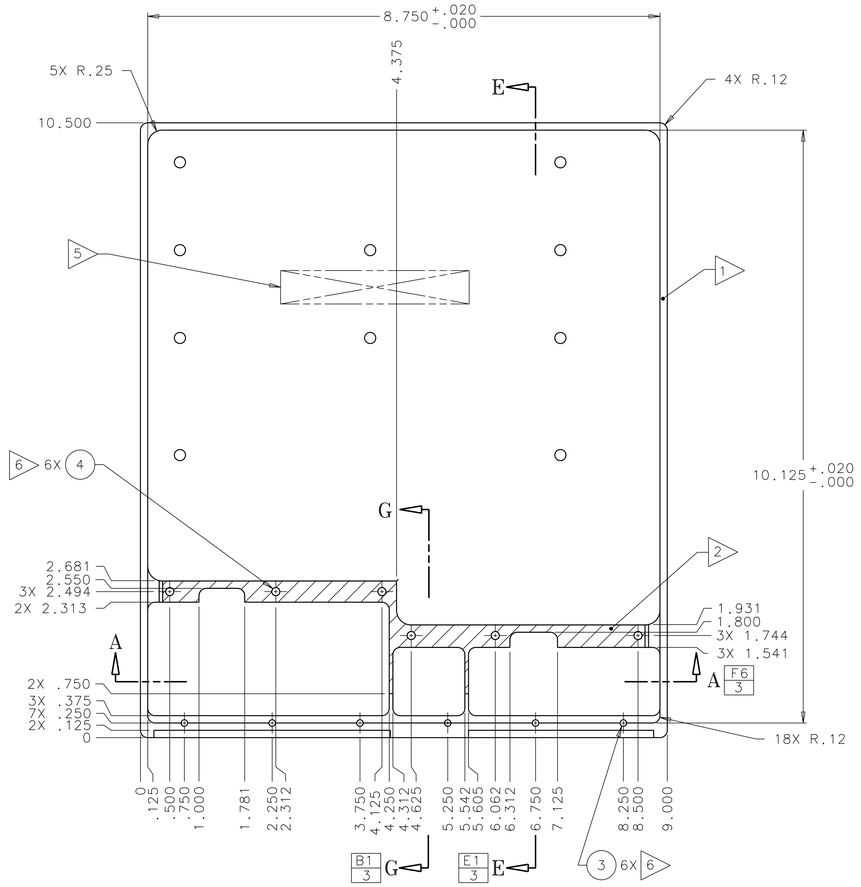

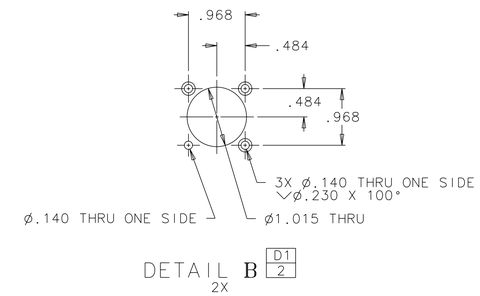

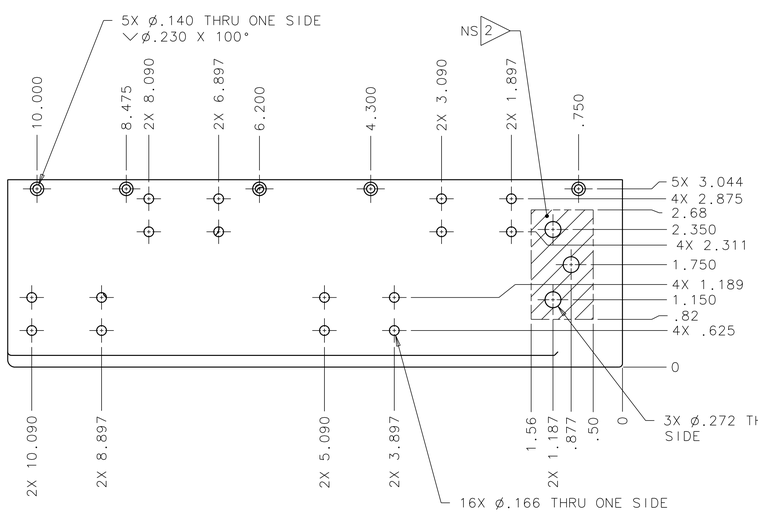

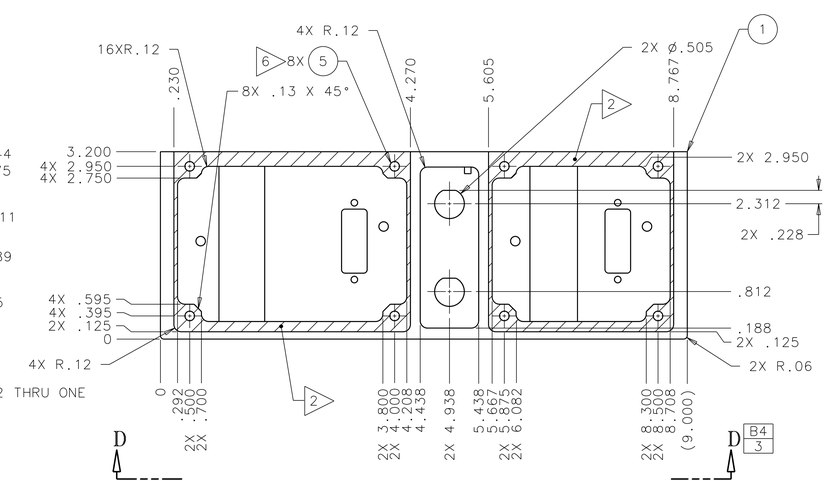

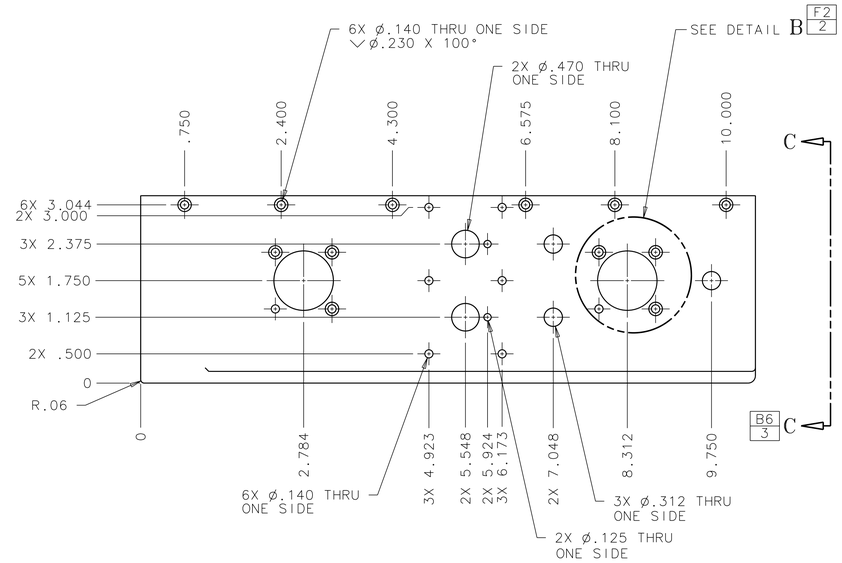

-301

NOT FINAL
IN REVIEW

SIZE	CODE ID NO.	DWG NO.	REV
E	21356	SDG46119489	TST
SCALE: 1/1	ORG EB	FMT S01MAR01	SHEET 2 OF 3

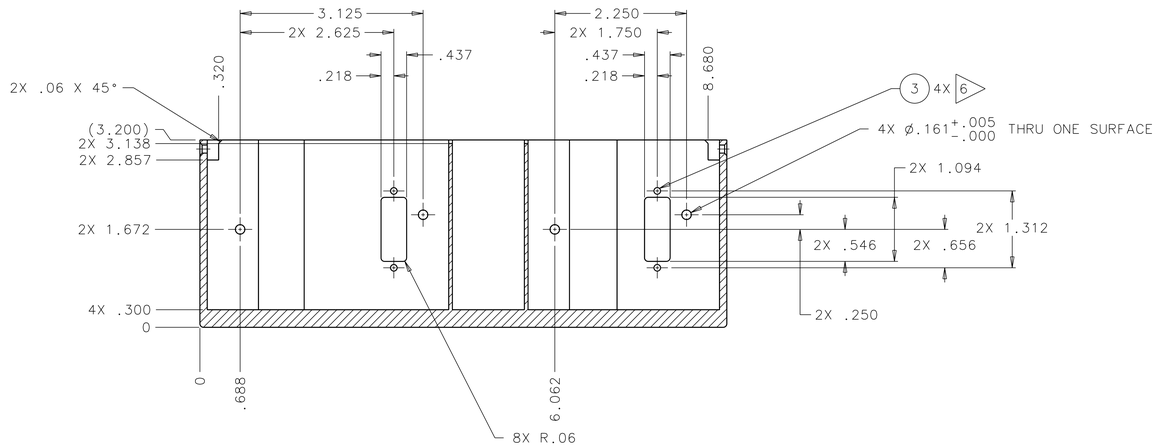

SECTION A–A E4 2

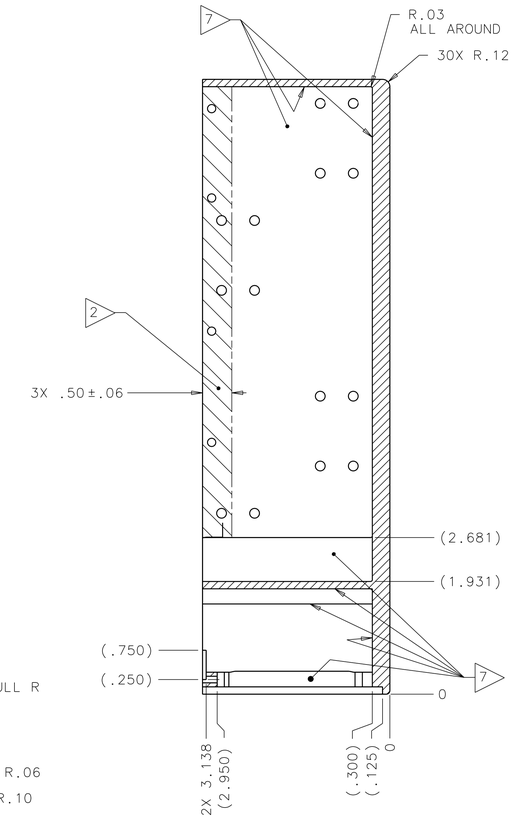

SECTION E–E E4 2

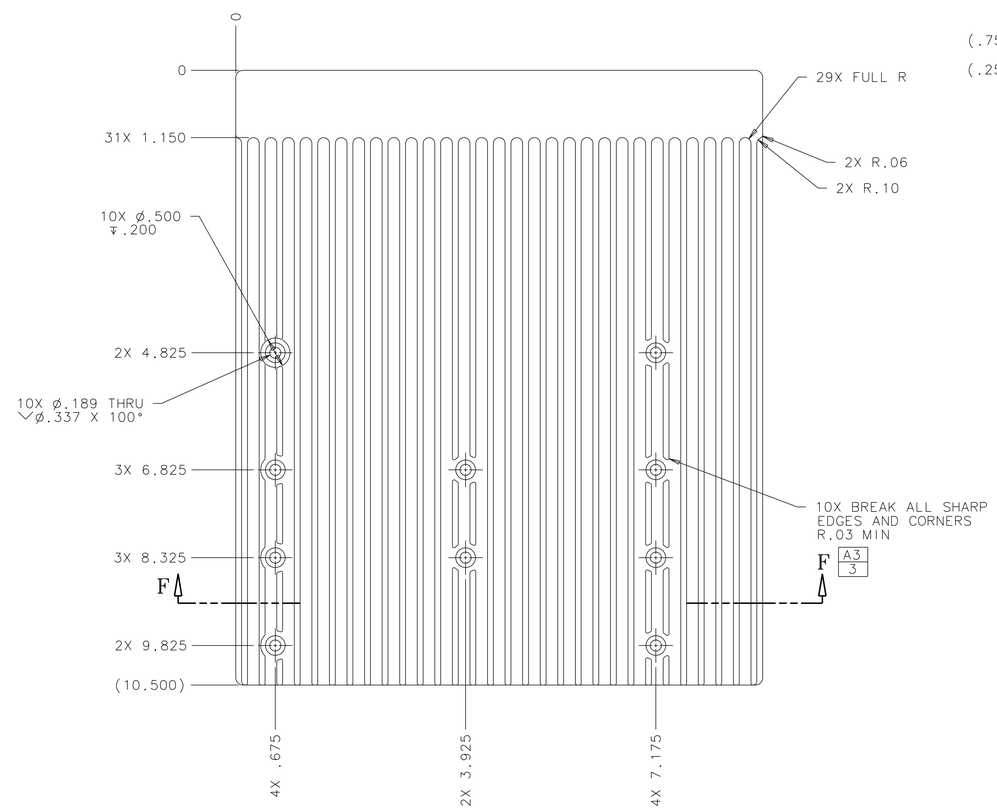

VIEW D–D B4 2

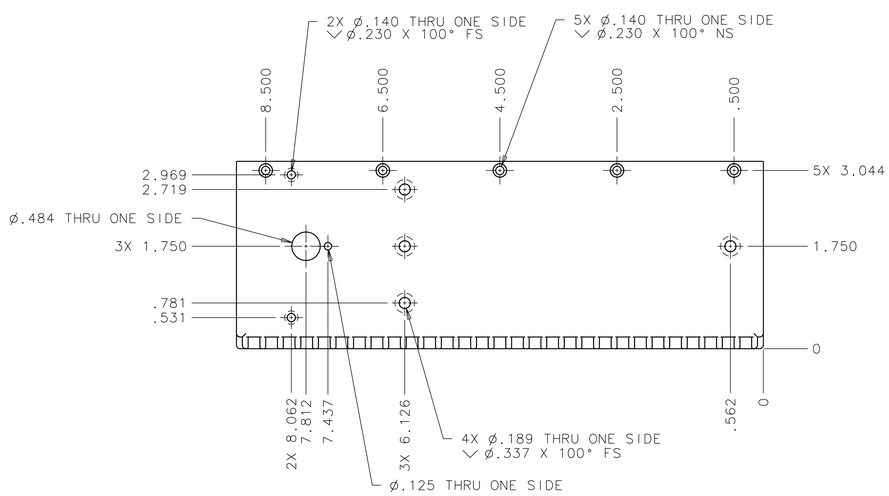

VIEW C–C C1 2

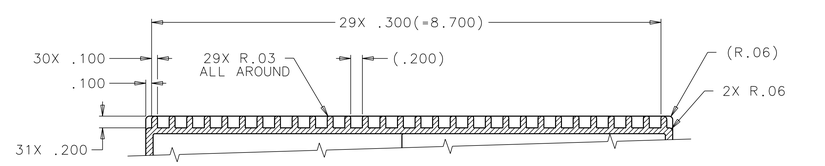

SECTION F–F C3 3

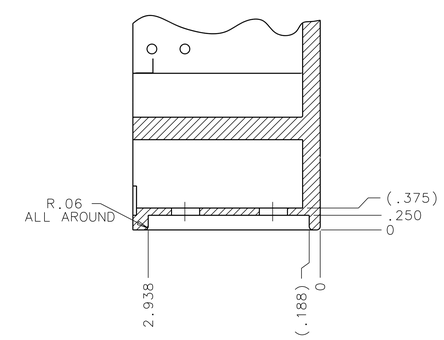

SECTION G–G E5 2

NOT FINAL
IN REVIEW

SIZE	CODE IID NO.	DWG NO.	REV
E	21356	SDG46119489	TST
SCALE: 1/1	ORG EB	FMT S01MAR01	SHEET 3 OF 3