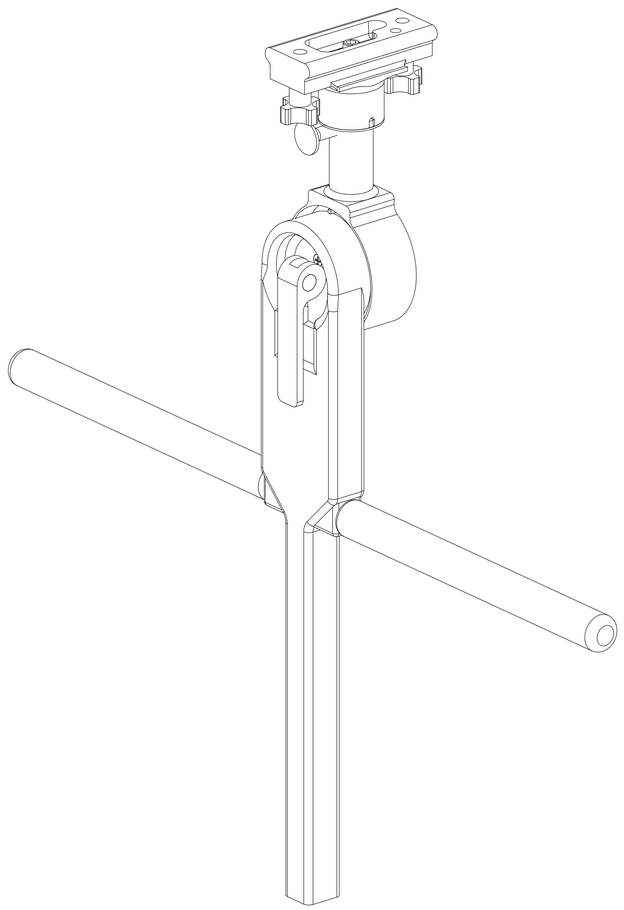

LEG RESTRAINT

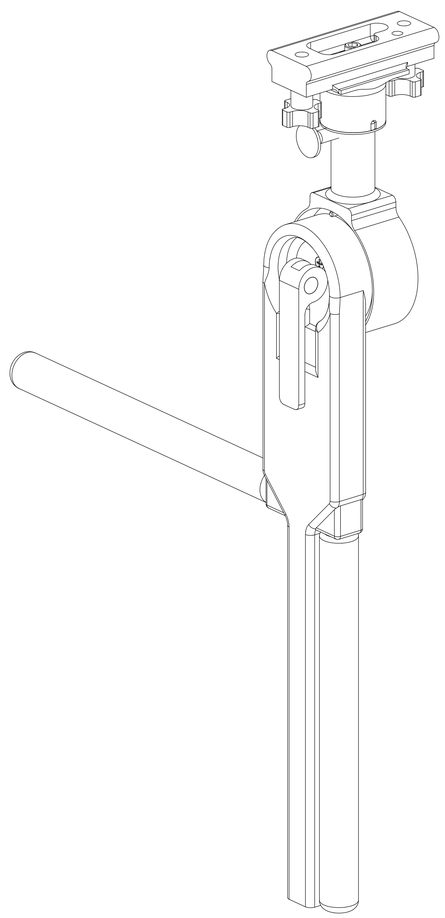

LEG RESTRAINT
WITH FOLDED LEG

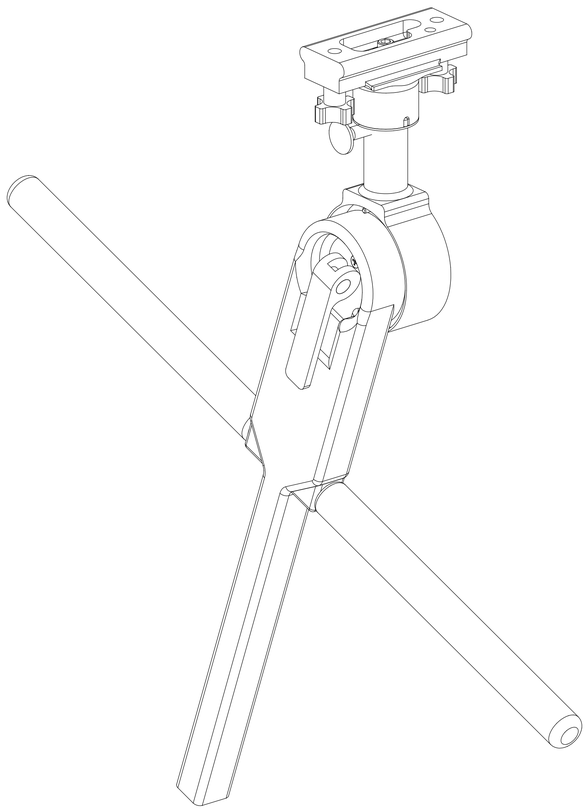

LEG RESTRAINT
WITH BREAK-AWAY DESIGN