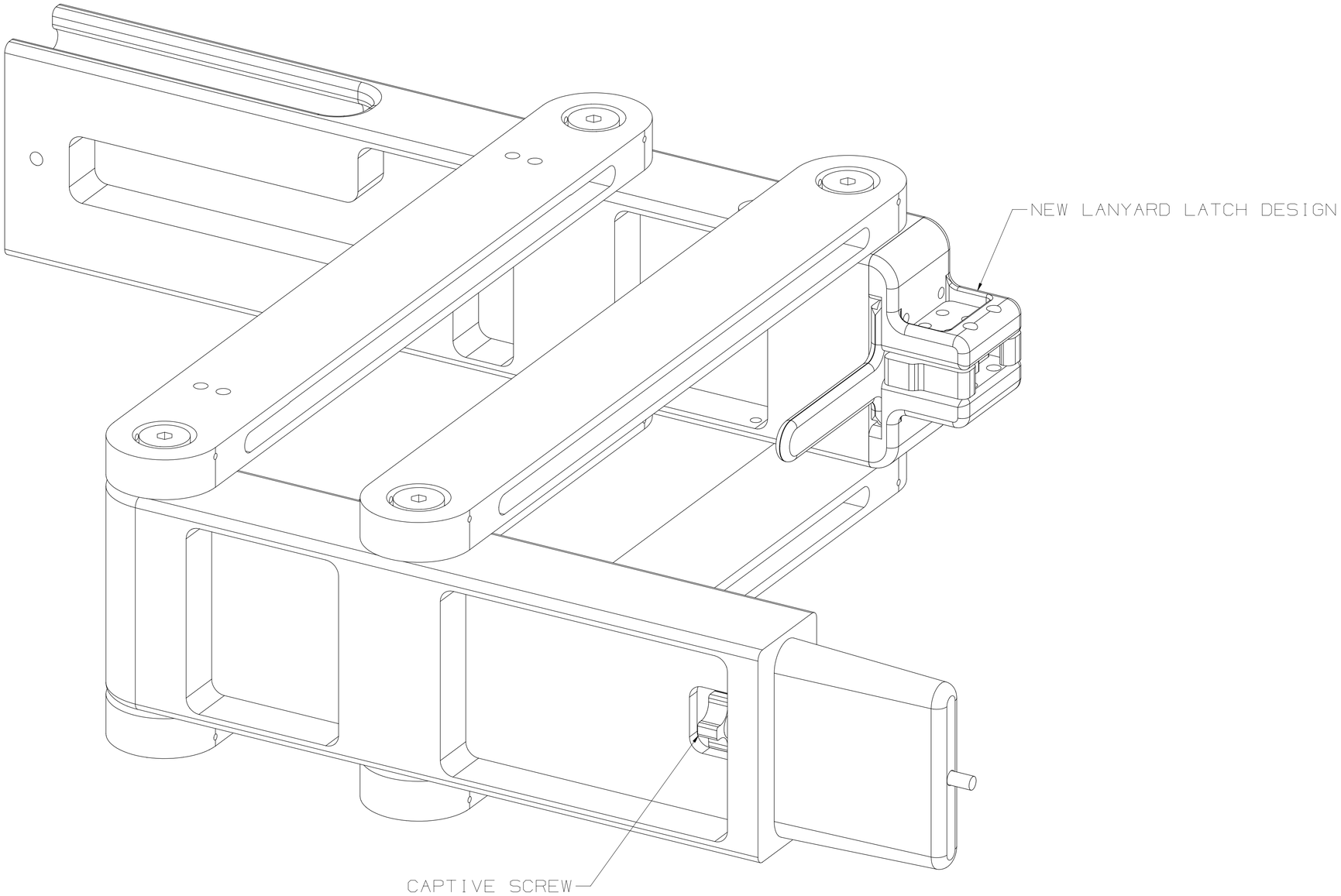

GUIDING ASSEMBLY