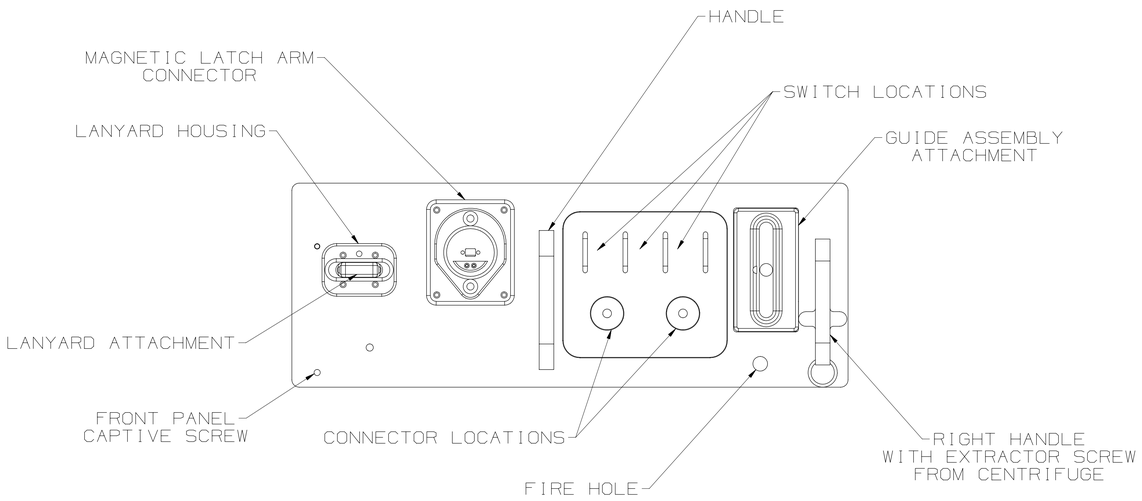

SLAMMD FRONT PANEL
4 PU DRAWER

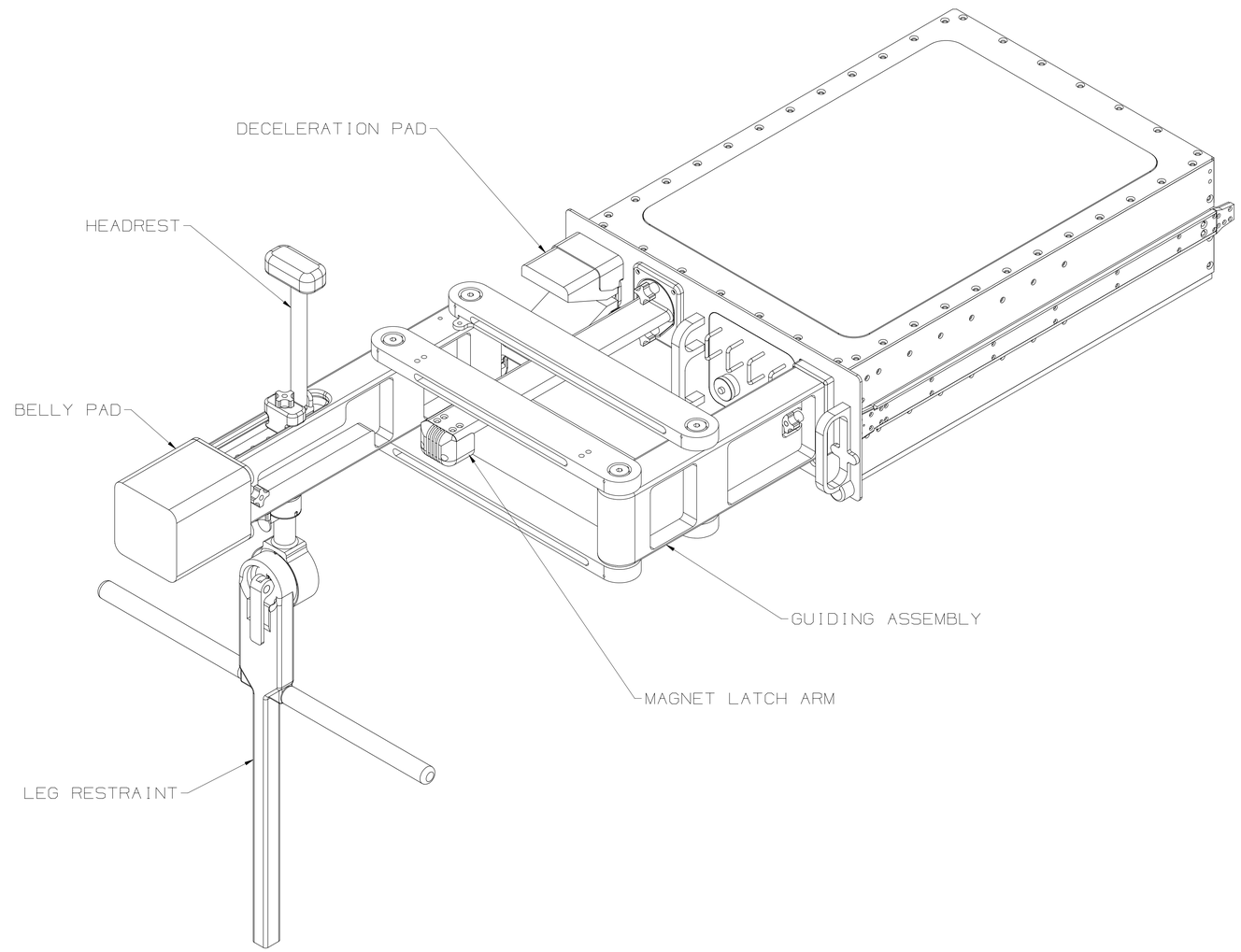

OPERATIONAL ASSEMBLY

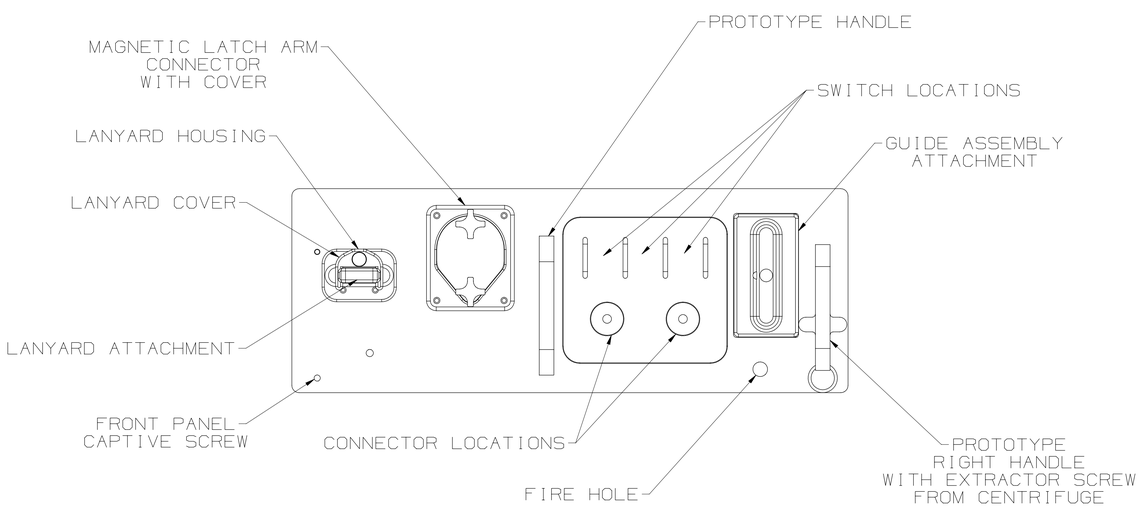

SLAMMD FRONT PANEL
4 PU DRAWER