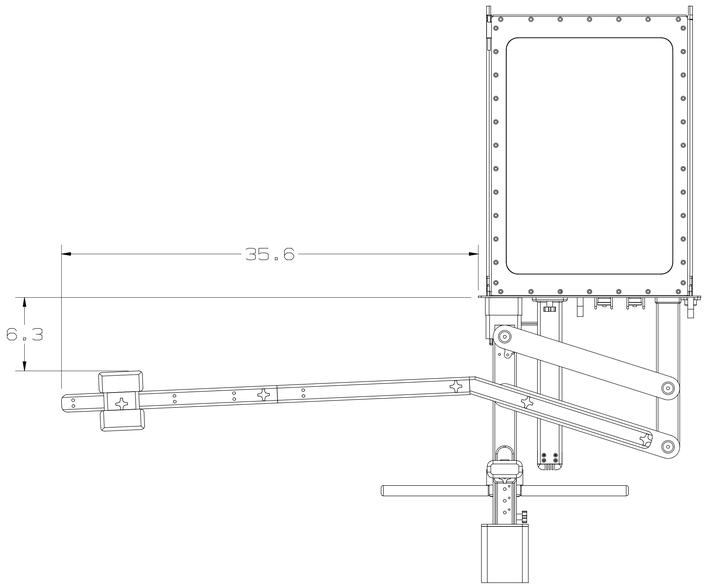

CALIBRATION ARM LEFT
AT FURTHEST POINT FORWARD

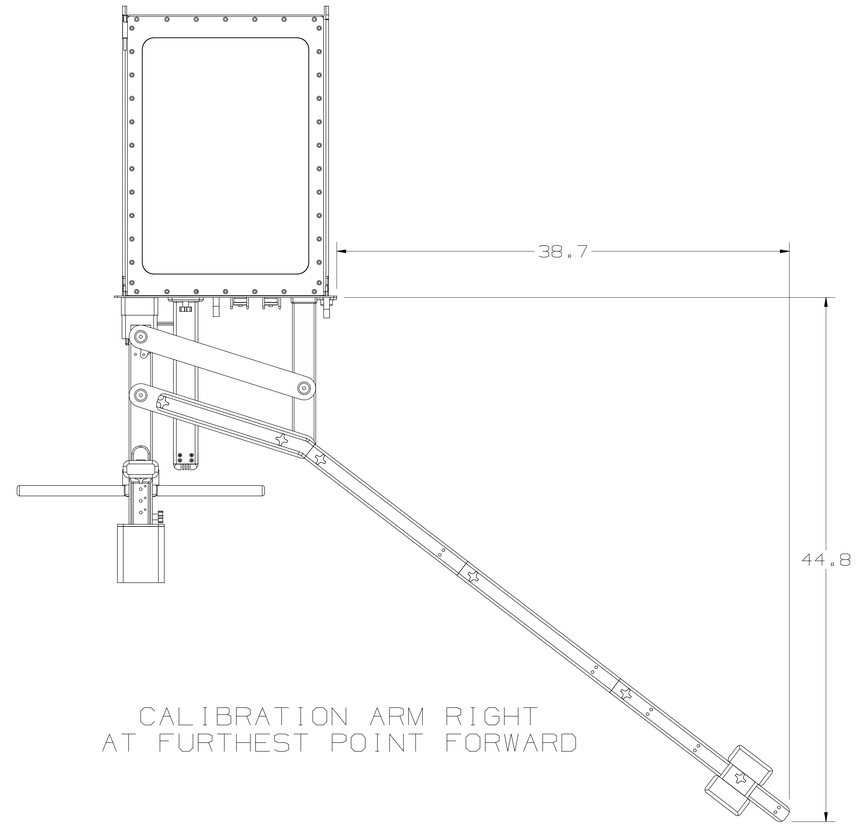

CALIBRATION ARM RIGHT
AT FURTHEST POINT FORWARD

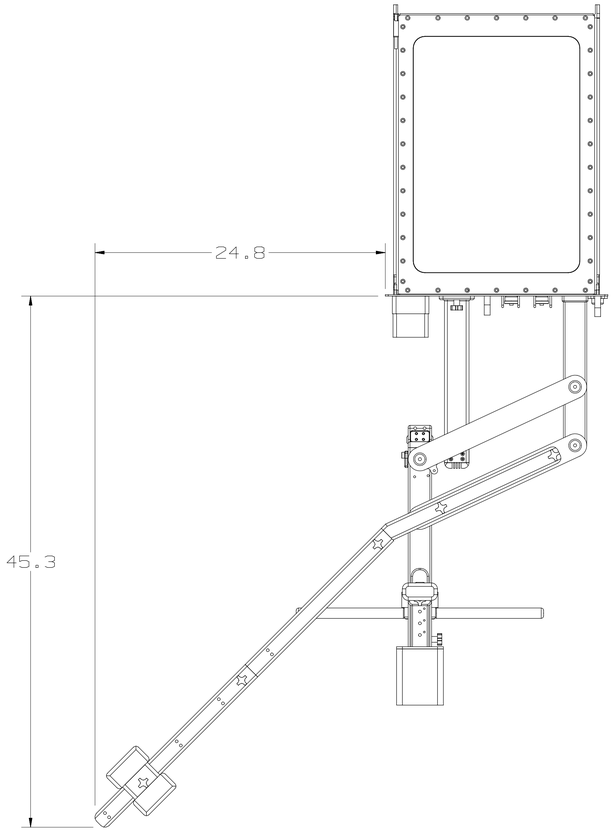

CALIBRATION ARM LEFT
IN START POSITION

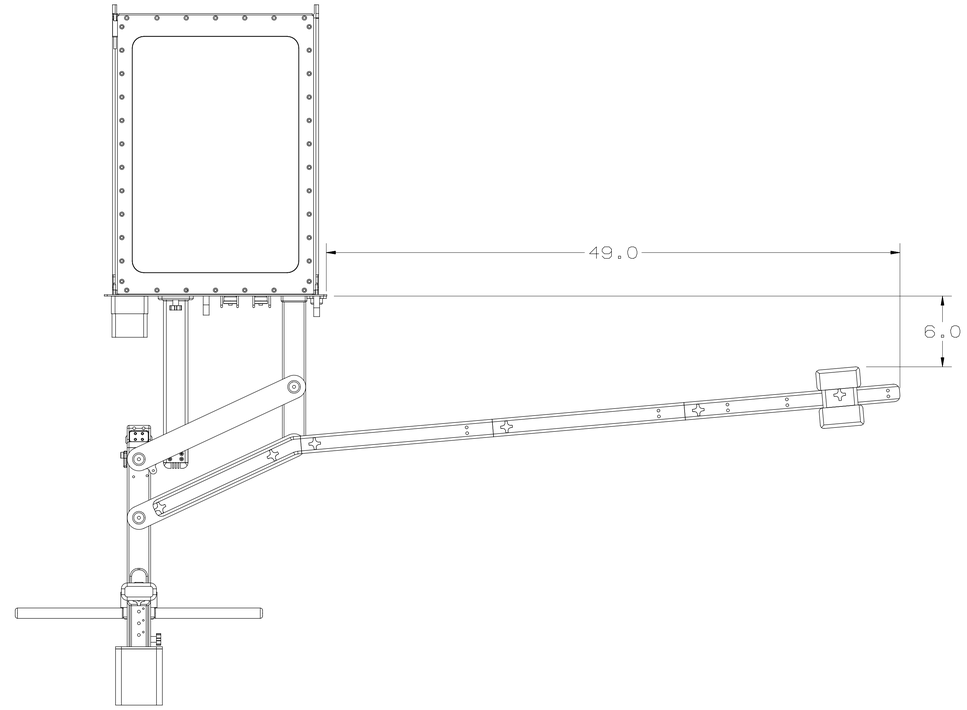

CALIBRATION ARM RIGHT
IN START POSITION

CALIBRATION ARM ENVELOPE