LTR	ZONE	REVISION	DATE	EQUIP TYPE
A	M/L	INCORPORATED DCN #1206	4/4/95	FLIGHT HDWR
		CHANGED ITEM 2 P/N - WAS: KLSK270226	5/19/95	
		CHANGED ITEM 4 P/N - WAS: KLSK27003	5/27/95	
		CHANGED ITEM 3 P/N - WAS: KLSK270052	5/30/95	
	SHT 1	CHANGED P/N OF ITEM 10 - WAS: MS51957-11	5/30/95	
	M/L	ADDED P/N & MANUFACTURER FOR ITEM 16 & COLUMN DESCRIPTION/MATERIAL - WAS: AVERY	5/30/95	
		MOVED INFO ITEMS 9 & 10 FROM COLUMN MANUFACTURER TO COLUMN SPECIFICATION	5/30/95	
	SHT 2			
	D5	CHANGED LABEL & CALLOUT 16 LOCATION - WAS: ZONE D4		
	D3	DELETED CALLOUTS 14 & 15 FROM DWG. FIELD		
	C2	ADDED BLOCK DIAGRAM TO DETAIL A		
	B3-A3	ADDED BLOCK DIAGRAM & TO DETAIL B		
	B1-A1	ADDED BLOCK DIAGRAM & TO DETAIL C		
B	SHT 1			FLIGHT HDWR
	M/L	ADDED -302 COLUMN AND QTY'S ADDED ITEMS 20-36, ADDED -302 CONFIGURATION		
	SHT 3	ADDED SHEET 3		
		THIS DWG. REV. "B" REDRAWN AND REPLACES REV. "A".		

REV	ZONE	DESCRIPTION OF CHANGE
C	SHT 1	INCORPORATED DCN #1969
	M/L	ADDED ITEM 21 AND 44
	SHT 3	
	D4	CHANGED CALLOUT 27 TO CALLOUT 28 ON -302 CONFIGURATION
	A2-B3	ADDED DUST COVER, ITEM 44, FOR PANEL MOUNT CONNECTOR, ITEM 26. ON VIEW E-E FOR -302, G-G AND VIEW E-E FOR -303 SHEET 4.
	B1-C1	ADDED DUST COVER, ITEM 21 ON -302 CONFIGURATION
	SHT 4	
	B7	ADDED SHRINK TUBING, ITEM 35 ON WIRING DIAGRAM FOR -302
	SHT 1	INCORPORATED DCN #2117
	M/L	CORRECTED P/N OF ITEM 44 ON DCN 1969 - WAS: 660-009M054-12 AND MANUFACTURER, WAS: LEMO USA, INC.
	SHT 1	INCORPORATED DCN #3221
	M/L	ADDED ITEM 45
	B6-4	ADDED FLAG NOTE 7
	SHT 4	
	C7	ADDED FLAG 7 TO CALLOUT 23 TO WIRING DIAGRAM FOR -302
	SHT 1	INCORPORATED DCN #11235 UPDATED FORMAT AND TITLE BLOCK TITLE BLOCK, ORG WAS: "SO"; NOW ORG IS: EA5.
	M/L	CORRECTED STEP 3 ON DCN 3221: ITEM 44 BECAME ITEM 46. ADDED -303 COLUMN AND ITS QTY'S AND ITEMS 47 AND 48
	NOTES	DELETED GENERAL NOTE 1. WAS: FRACTURE CRITICAL UPDATED FLAG AND GENERAL NOTES TO CURRENT SPEC'S.
	SHT 3	SHEET 3 IS NOW SHEET 2, MOVED VIEW D-D TO SHEET 3, MOVED -302 WIRING DIAGRAM TO SHEET 3.
	SHT 4	MOVED -303 CONFIG FROM SHEET 3 TO SHEET 4, MOVED VIEW G-G FROM SHEET 3 TO SHEET 4. ADDED VIEW H-H AND -303 WIRING DIAGRAM TO SHEET 4.
		THIS 4-SHEET DWG REV. "C" REDRAWN AND REPLACES 3-SHEET DWG. REV "B"

7> APPLY CONFORMAL COAT, ITEM 46, TO UNCOATED AREAS ON AND AROUND E1-E7 AS REQ'D. PER QP-KLS-019-1, SEC. V (PRC-4001).

6> MARK & IDENTIFY PER NASA/JSC PRC-9002, USING DECAL, ITEMS 39-43. LOCATE APPROX. AS SHOWN. DECALS MAY BE APPLIED AT NEXT ASSEMBLY BEFORE OR DURING P.I.A.

5> ANODE (LONG LEAD "A") SHALL CONNECT TO E5. CATHODE (SHORT LEAD W/FLAT ON LED "K") SHALL CONNECT TO E4.

4> MARK & IDENTIFY PER NASA/JSC PRC-9002 ON LABEL, ITEM 19, USING LASER JET PRINTER, TRANSLATE INTO RUSSIAN PER JSA-CBPD/94-100 AS REQ'D. LOCATE APPROX. AS SHOWN.

3> APPLY LOCTITE, ITEM 18, TO ALL THREADED AREAS BEFORE ASSEMBLY.

2> MARK & IDENTIFY PER NASA/JSC PRC-9002, USING CRITCHLEY MARKING SYSTEM, USING SHRINK SLEEVING, ITEM 17, PER MFG'S INSTRUCTIONS. LOCATE APPROX. AS SHOWN.

1> MARK & IDENTIFY P/N & S/N (STARTING WITH S/N 1001) PER NASA/JSC PRC-9002, ON LABEL, ITEM 16, AS SHOWN. (TRANSLATE INTO RUSSIAN AS REQ'D. PER USA-CBPD/94-100 ON LABEL, ITEM15), USING LASER JET PRINTER, COVER LABEL WITH TEFLON TAPE, ITEM 14, LOCATE APPROX. AS SHOWN. CHECK WITH DWG. CONTROL FOR NEXT AVAILABLE S/N.

FLAG NOTES

9. INTERPRET DWG. PER NASA/JPG 8500.4D.
8. ALL DIMENSIONS ARE IN FEET AND OR INCHES.
7. PERFORM CONTINUITY TEST PER QP-WLS-019-1, SEC. VII.
6. STATIC SENSITIVE COMPONENTS, USE ESD PRECAUTIONS. PER QP-WLS-019-1.
5. SOLDER PER QP-KLS-019-1, SEC. II.
4. BAG AND TAG TO IDENTIFY P/N PER NASA/JSC PRC-9002
3. CLEAN PER NASA/JSC PRC-5001 TO LEVEL G.C.
2. VERIFY THAT NO SHARP EDGES EXIST PER NASA/JSC SSP-50005.
1. DELETED

NOTES: UNLESS OTHERWISE SPECIFIED

-303	-302	-301	PART NUMBER	DESCRIPTION/MATERIAL	MANUFACTURER	REF. DES.	SPECIFICATION	ITEM
1			KLSK270053-303	CABLE ASSEMBLY	WYLE LABORATORIES HOUSTON, TX			48
X			-303	CBPD POWER ADAPTOR ASSY.				47
A/R	A/R		RTV3140	CONFORMAL COAT/SILICONE	DOW CORNING MIDLAND, MI			46
A/R	A/R		RTV1200	PRIMER	DOW CORNING MIDLAND, MI			45
1	1		660-009M10S4-01	COVER, DUST/SS	GLENAIR GLENDALE, CA			44
1	1		KLSF310005-001	DECAL	WYLE LABORATORIES HOUSTON, TX			43
1	1		KLSF310005-004	DECAL	WYLE LABORATORIES HOUSTON, TX			42
1	1		SDG32104825-001	LABEL (BARCODE)				41
1	1		KLSF310005-003	DECAL	WYLE LABORATORIES HOUSTON, TX			40
1	1		KLSF310005-002	DECAL	WYLE LABORATORIES HOUSTON, TX			39
2	2		MS51957-12	SCREW PAN HEAD CROSS-RECESSED			CRES, 300 SERIES 4-40UNC-2A X 3/16 LG	38
1	1		MS51957-17	SCREW PAN HEAD CROSS-RECESSED			CRES, 300 SERIES 4-40UNC-2A X 1/2 LG	37
4	4		MS21043-04	NUT				36
1 IN.	1 IN.		RNF-150-1/8	SHRINK TUBING	RAYCHEM MENLO PARK, CA		MIL-DTL-23053/18, CLASS 2	35
3	3		PLT1M-C76	TIE WRAP/TEFZEL	PANDUIT CORP. TINLEY PARK, IL			34
1	1		PLC1M-54-C	TIE WRAP/NYLON	PANDUIT CORP. TINLEY PARK, IL			33
1	1		276-080	HOLDER, LED/ALUMINUM	IDI HACKENSACK, NJ			32
1	1		4304H5	LED, GREEN	IDI HACKENSACK, NJ			31

-303	-302	-301	PART NUMBER	DESCRIPTION/MATERIAL	MANUFACTURER	REF. DES.	SPECIFICATION	ITEM
2	2		R18-6L	TERMINAL LUG/TIN PLATED COPPER	3M CORP. AUSTIN, TX			30
3 FT.	3 FT.		M22759/11-20-9	WIRE TFE 20 AWG			MIL-W-22759/11	29
1	1		KLSK270343-001	SWITCH GUARD	WYLE LABORATORIES HOUSTON, TX			28
1	1		MS26574-1	CIRCUIT BREAKER, 1 AMP				27
1	1		MS3470L10-6P	CONN. PANEL MOUNT				26
1	1		KLSK270144-002	COVER	WYLE LABORATORIES HOUSTON, TEXAS			25
1	1		KLSK270165-702	HOUSING	WYLE LABORATORIES HOUSTON, TEXAS			24
1	1		KLSK270046-303	POWER ADAPTER BOARD ASSY	WYLE LABORATORIES HOUSTON, TEXAS			23
	1		KLSK270053-302	CABLE ASSY, PUMP/MAIN UNIT POWER	WYLE LABORATORIES HOUSTON, TEXAS			22
1	1		BFG.0B.100.PCSG	COVER, DUST/PLASTIC	LEMO USA, INC SANTA ROSA, CA			21
	X		-302	CBPD POWER ADAPTOR ASSY.				20
		A/R	3M-69 2	TAPE, GLASS FIBERCLOTH (361)	3M INDUSTRIAL TAPE DIVISION ST. PAUL, MN			19
A/R	A/R	A/R	242	LOCTITE	LOCTITE CORP. NEWINGTON, CT.			18
		3	HS127-WE-1WF152-B	SHRINK SLEEVING, POLYOLEFIN	CRITCHLEY INCORPORATED SALT LAKE CITY, UTAH			17
		1	KLSK270190-001	LABEL, ALUMINUM, ADHESIVE BACKING	WYLE LABORATORIES HOUSTON, TEXAS			16
		AR	9165 OR 5353	LABEL, RUSSIAN, PAPER ADHESIVE BACK	AVERY LABEL CO. AZUSA, CA			15
		AR	2-1/4X36TYPEC	TAPE, CLEAR TEFLON	CHR INDUSTRIES NEW HAVEN, CT			14
1	1	2	MS35489-4X	GROMMET				13
		1	MS35489-6X	GROMMET				12
		3	7622K-ND	CABLE CLAMP 3/16"	KEYSTONE ASTORIA, NY			11
7	7	4	MS51957-15	SCREW, MACHINE-PAN HEAD, CROSS-RECESSED			CRES, 300 SERIES 4-40UNC-2A X 3/8LG.	10
8	8	8	MS51959-13	SCREW, MACHINE-FLAT COUNTERSUNK HEAD, 82°, CROSS-RECESSED			CRES, 300 SERIES 4-40UNC-2A X 1/4LG.	9
4	4	4	2106440A OR J175-ND	STANDOFF, HEX 5/8, CRES	RAF ELECTRONIC SEYMOUR, CT.			8
		1	KLSK270144-001	COVER	AEROTECH PRECISION, HOUSTON, TEXAS			7
		1	KLSK270165-701	HOUSING	AEROTECH PRECISION, HOUSTON, TEXAS			6
		1	KLSK270046-301	POWER ADAPTER BOARD ASSY	WYLE LABORATORIES HOUSTON, TEXAS			5
		1	KLSK270053-301	CABLE ASSY, PUMP/MAIN UNIT POWER	WYLE LABORATORIES HOUSTON, TEXAS			4
		1	KLSK270052-301	CABLE ASSY, CONTROL UNIT POWER	WYLE LABORATORIES HOUSTON, TEXAS			3
		1	KLSK270228-301	CABLE ASSY, PRIMARY POWER	WYLE LABORATORIES HOUSTON, TEXAS			2
		X	-301	CBPD POWER ADAPTOR ASSY.				1

DIMENSIONAL TOLERANCE UNLESS NOTED OTHERWISE: .0 ±.1, .00 ±.02, .000 ±.005, ANGULAR ±.5°

SURFACE FINISH IN MICROINCHES RMS UNLESS NOTED OTHERWISE ✓

FRACTURE CRITICAL ☐ YES ☒ NO

NEXT ASSY SEM46111325

FILE NAME K270167C

☒ FLT HDWR ☐ OTHER (SPECIFY) APPLICABLE CSE

SIGNATURES	DATE
DR	
ENG	
CH	
APP	
QE	
MATL	
STRESS	
AUTH	

WYLE LABORATORIES
LIFE SCIENCES, SYSTEMS AND SERVICES HOUSTON, TEXAS

CBPD POWER ADAPTER ASSY.

PROJECT CONTINUOUS BLOOD PRESSURE DEVICE

SIZE D | CODE ID NO 5H755 | DWG NO KLSK270167 | REV C

SCALE N/A | ORG EA5 | SHEET 1 OF 4

REV	ZONE	DESCRIPTION OF CHANGE

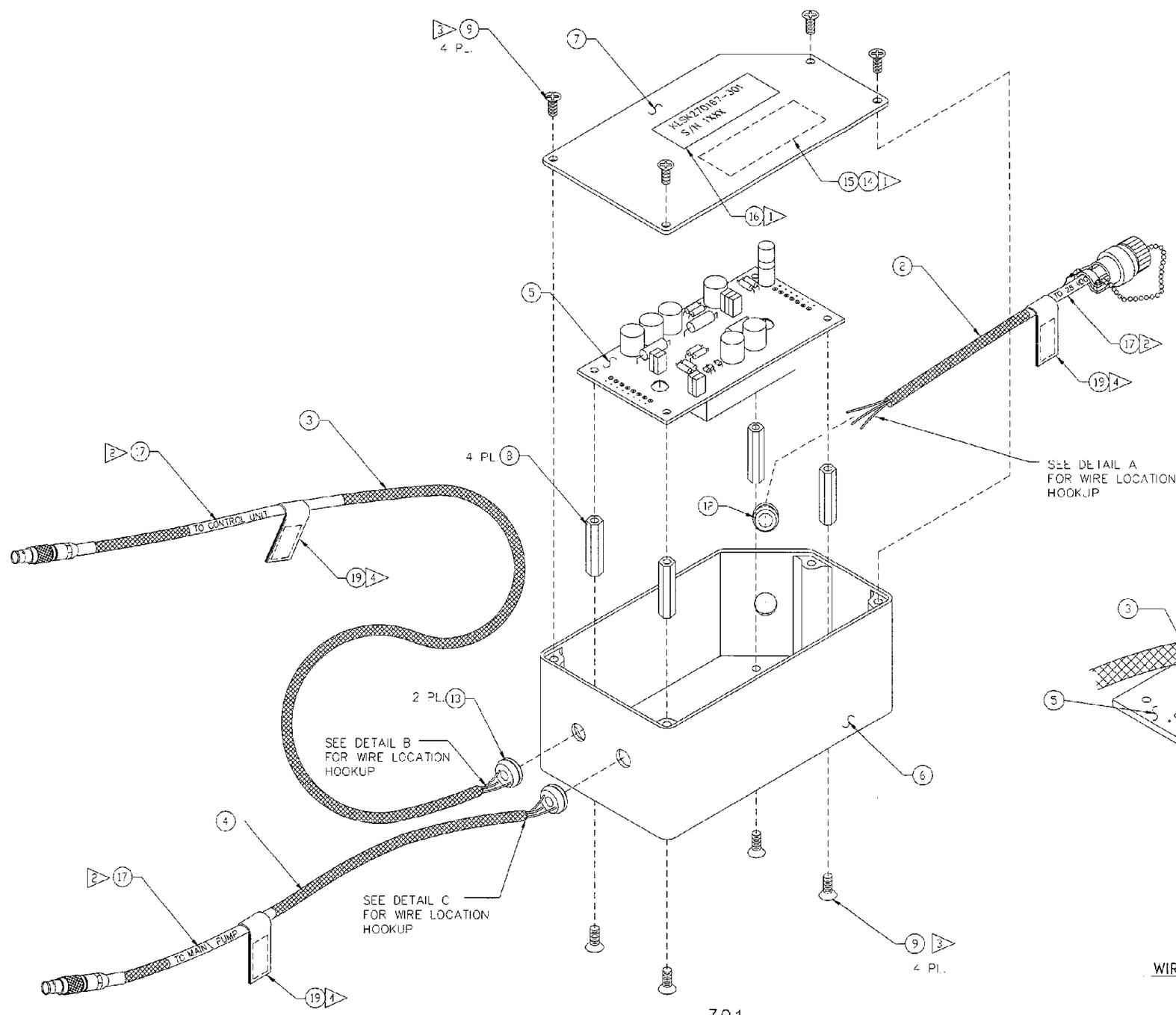

-301

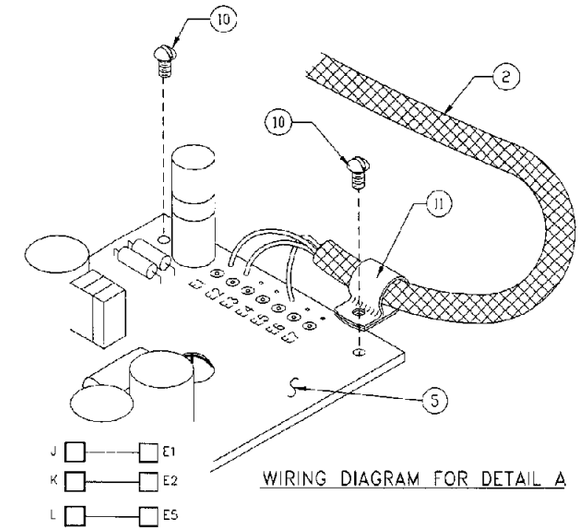

WIRING DIAGRAM FOR DETAIL A

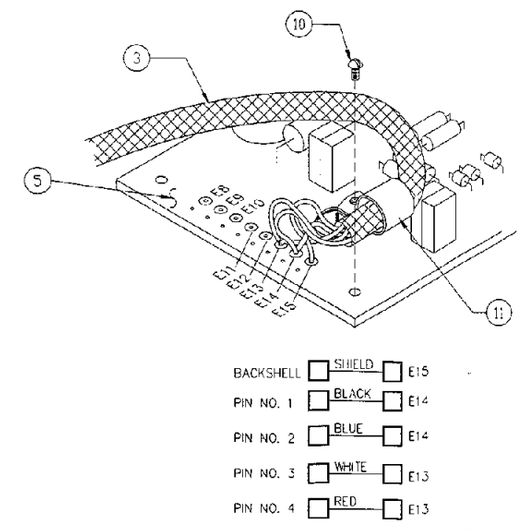

WIRING DIAGRAM FOR DETAIL B

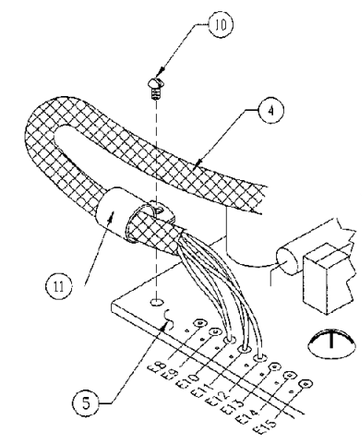

WIRING DIAGRAM FOR DETAIL C

SIZE	CODE IDENT NO	DWG NO	REV
D	5H755	KLSK270167	C
SCALE N/A	ORG EA5	SHEET 2 OF 4	

REV	ZONE	DESCRIPTION OF CHANGE

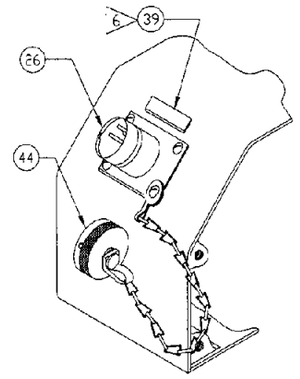

VIEW E–E

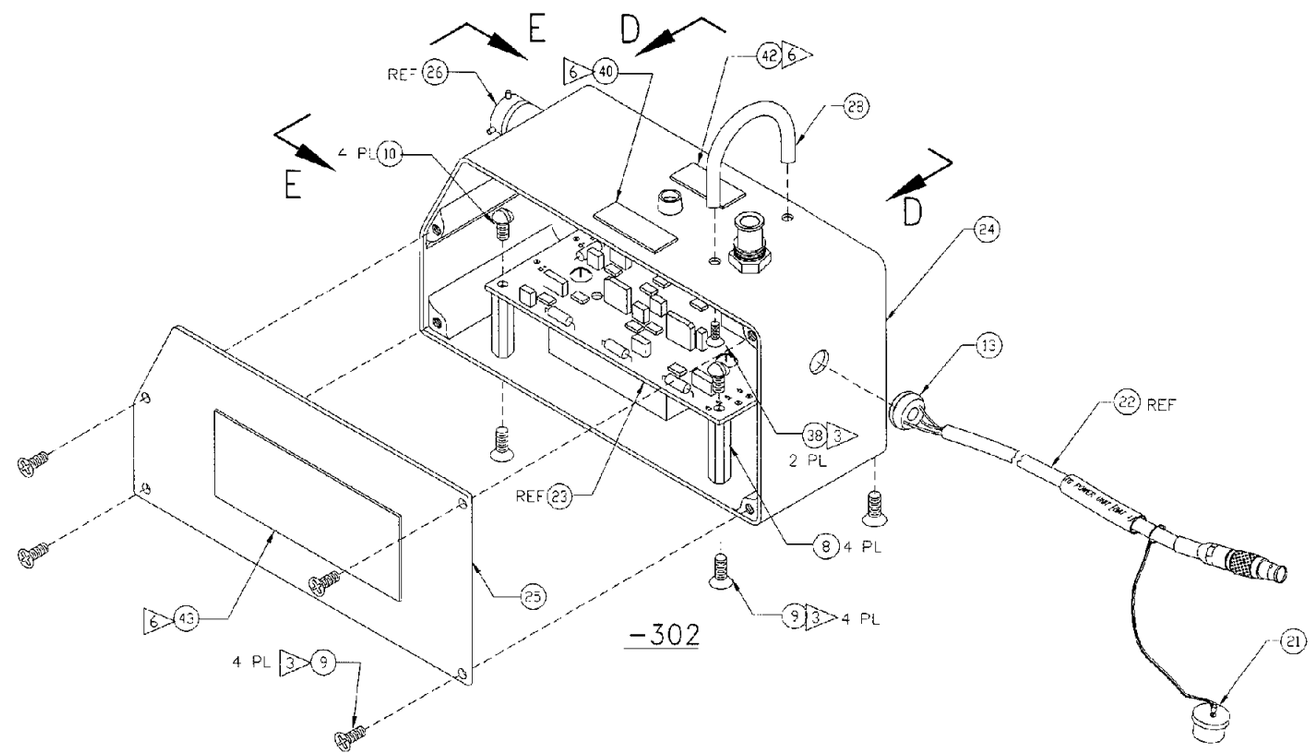

–302

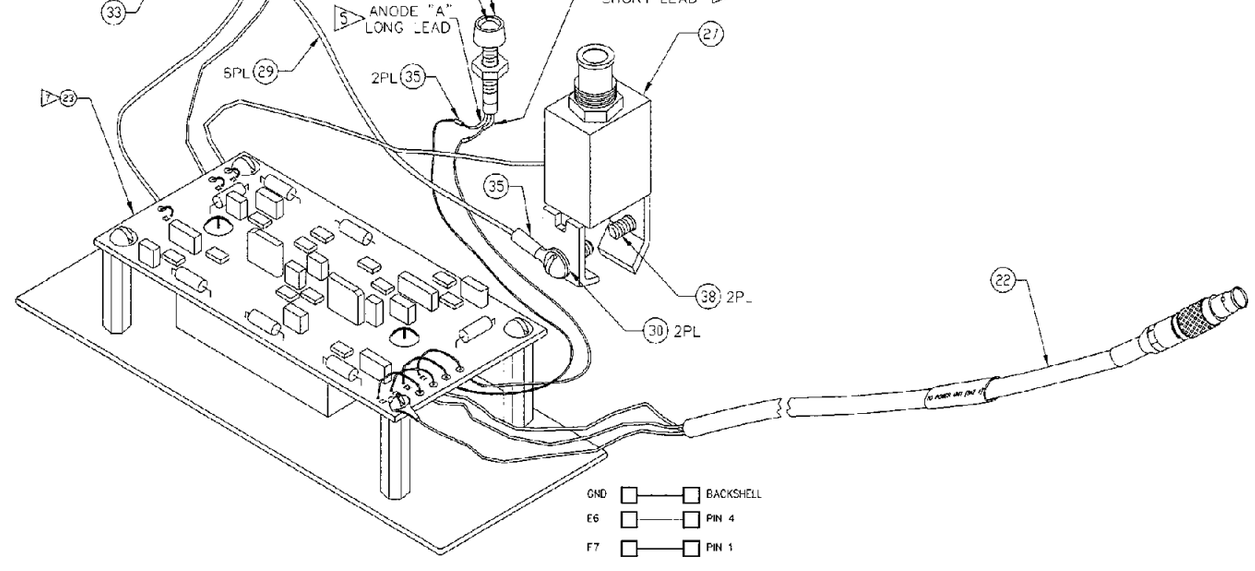

WIRING DIAGRAM FOR –302

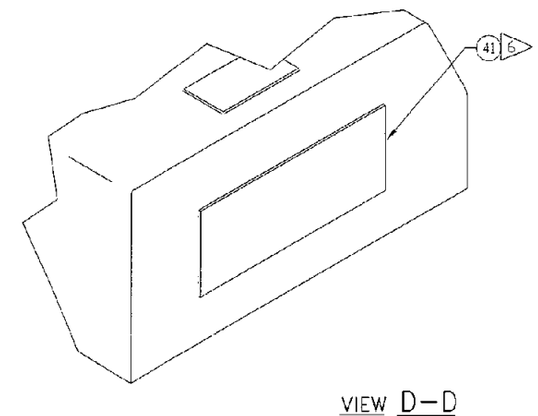

VIEW D–D

SIZE	CODE ID NO	DWG NO	REV
D	5H755	KLSK270167	C
SCALE N/A	ORG EA5	SHEET 3 OF 4	

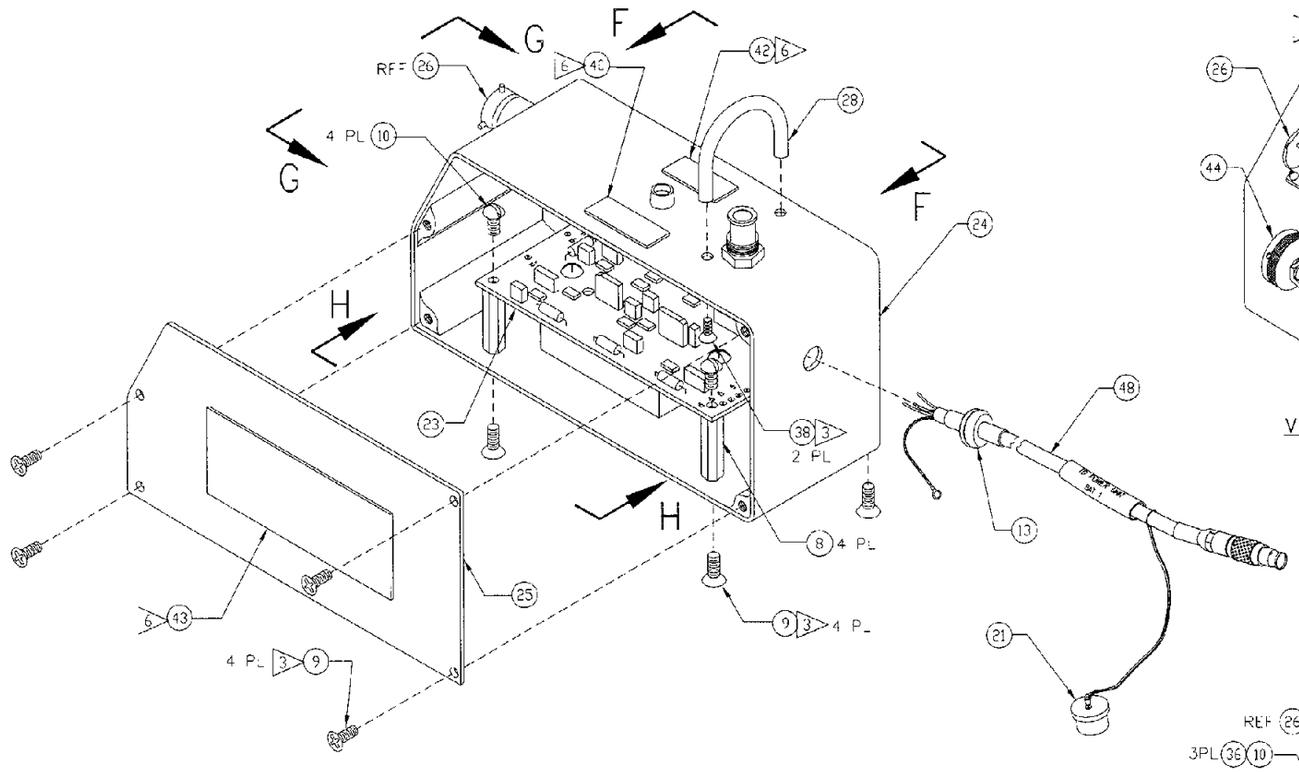

-303

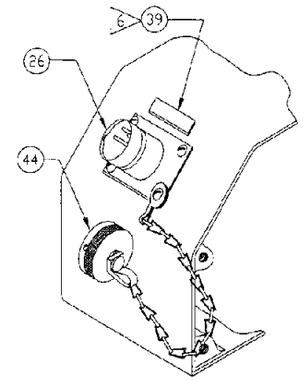

VIEW G-G

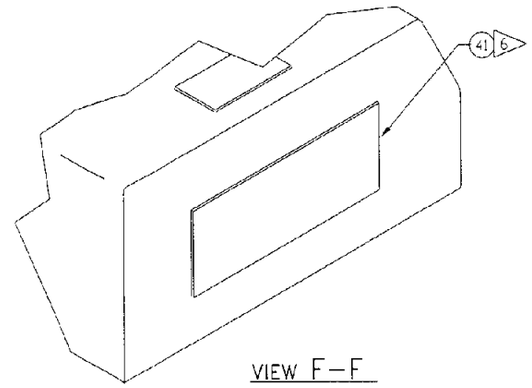

VIEW F-F

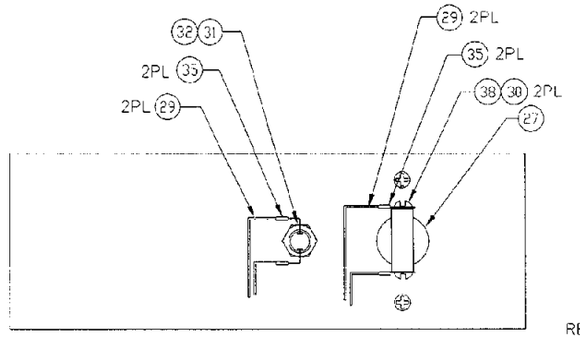

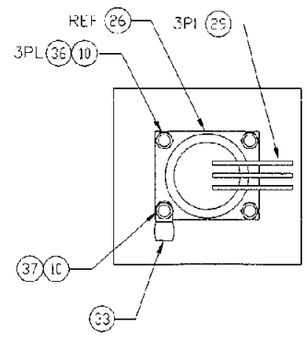

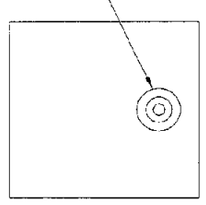

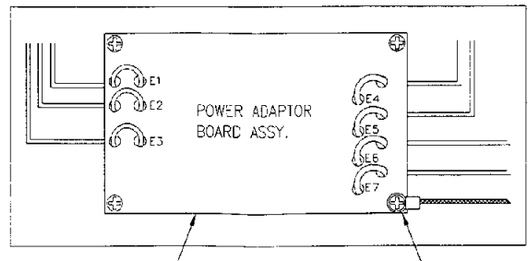

VIEW H-H

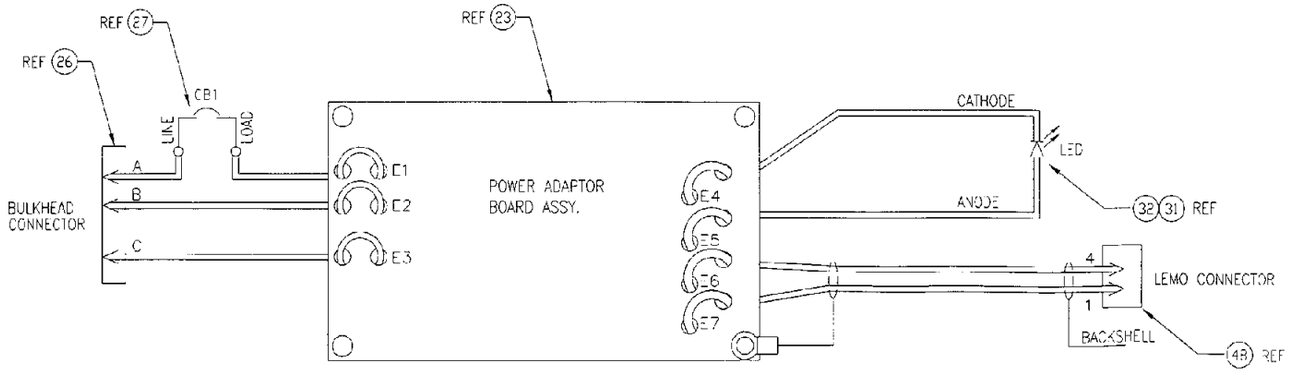

-303 WIRING DIAGRAM

SIZE	CODE ID NO	DWG NO	REV
D	5H755	KLSK270167	C
SCALE N/A	ORG EA5	SHEET 4 OF 4	