REV	ZONE	DESCRIPTION OF CHANGE
A		INCORPORATED DCN #11051
	M/L	ADDED ITEM 23
	D5 & D6	ADDED CALLOUT 23 TO CALLOUT 15
	A5	CHANGED FLAG NOTE 1, WAS: ".... USING LASER JET PRINTER. ..."
	M/L	ADDED ITEM 24
		CHANGED ITEM 17 FROM SPLICE TO TAPE
	D8	ADDED CALLOUT 17, 22 AND 24 TO CALLOUT 5 AND FLAG 7
	D7	CHANGED CALLOUT 17 TO CALLOUT 16
	C6	CHANGED CALLOUT 16 TO CALLOUT 22 AND FLAG 5
	D4	ADDED CALLOUT 17 WITH FLAG 7 AND CALLOUT 24 TO CALLOUT 9; ADDED FLAG 6 TO CALLOUT 8
	A6-4	ADDED FLAG NOTES 6 AND 7; ADDED "TORQUE ALL BACKSHELLS TO 10" LBS ±1" LBS TO FLAG NOTE 2
	D2-1	DETAIL-A MOVED TO ZONE B4-C4
	C8-6	ADDED D0 FRONT VIEW
	C5	ADDED D1, D2, D3 FRONT VIEW

THIS REV. "A" DWG. REDRAWN AND REPLACES ORIGINAL

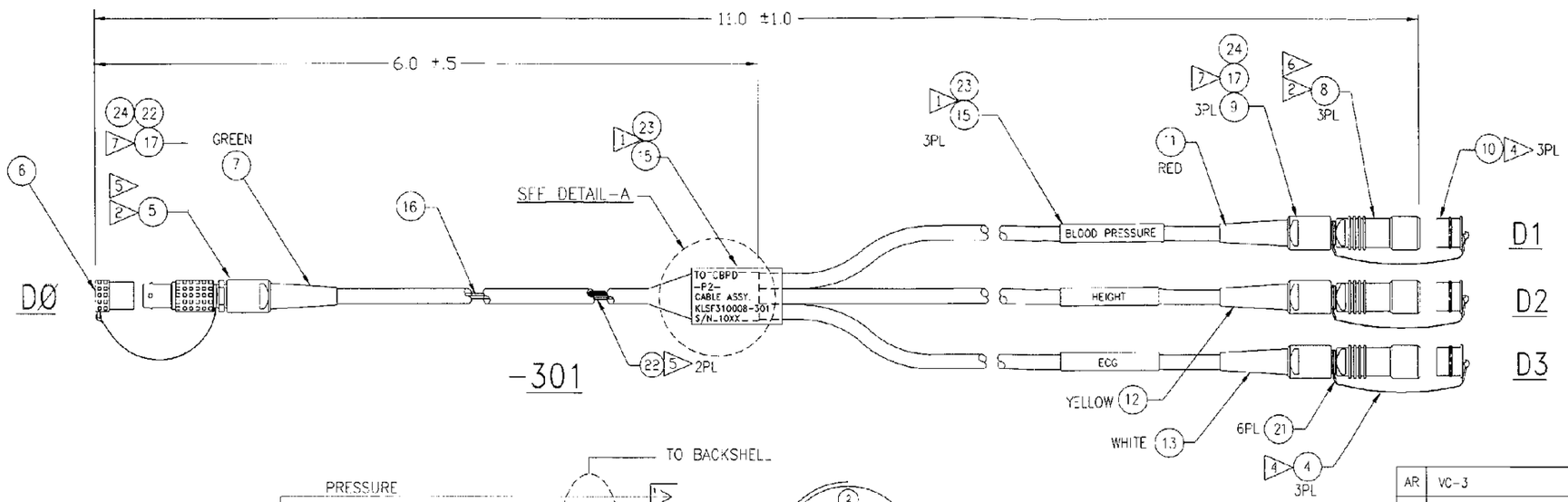

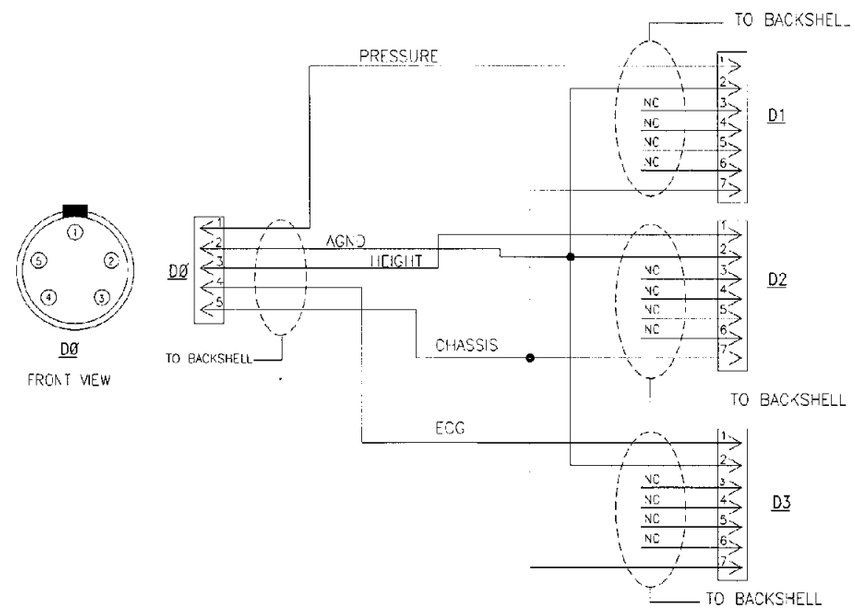

WIRING DIAGRAM

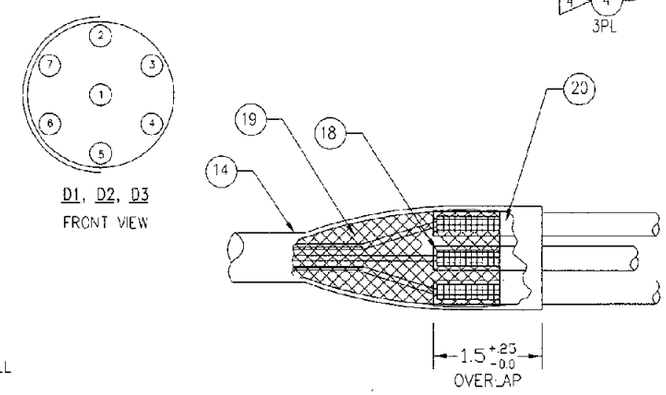

DETAIL- A

9. ALL DIMENSIONS ARE IN INCHES.
8. BAG AND TAG TO IDENTIFY PART NO. PER NASA/JSC PRC 9002.
7. CLEAN PER NASA/JSC PRC 5001 TO LEVEL G.C.
6. PERFORM DIELECTRIC TEST @ 250 VDC PER QP-KLS-019-1, SEC. VII, (NASA/JSC PRC-7003)
5. PERFORM CONTINUITY TEST PER QP-KLS-019-1, SEC. VI. (NASA/JSC PRC-7003)
4. CRIMP CONNECTIONS PER QP-KLS-019-1, SEC. V. (NASA/JSC PRC -7001)
3. SOLDER CONNECTIONS PER QP-KLS-019-1, SEC. II (NASA/JSC PRC -7001)
2. MANUFACTURE CABLE PER QP-KLS-019-1, SEC. VII (NASA/JSC PRC-7003).
1. INTERPRET DWG. PER JPG 8500.4D.

NOTES: UNLESS OTHERWISE SPECIFIED

7. USE TAPE, ITEM 17, TO BUILD UP DIAMETER OF CABLE BUNDLE FOR SHIELD TERMINATION.
6. CRIMP THE CONTACTS SUPPLIED WITH CONNECTOR, ITEM 8, USING DANIELS CRIMPER MODEL #: AFM8 AND W.W FISCHER POSITIONER P/N 104.961. SET THE CRIMPER TO SELECTOR SETTING #5. TENSILE STRENGTH TEST SHOULD EXCEED 8 lbs. IF EXTRA CONTACTS ARE NEEDED USE W.W. FISCHER CONTACT P/N 200.1682.
5. USE SHRINK TUBING, ITEM 22, TO INSULATE SOLDER CONTACTS AND SPLICES.
4. REMOVE AND DISCARD MFR. TETHER SUPPLIED WITH DUST CAP, ITEM 10, AND REPLACE WITH CABLE LANYARD, ITEM 21, AS REQ'D. CUT LANYARD TO APPROPRIATE LENGTH AS NECESSARY.
3. THE SUFFIX (-X) DENOTES ANY COLOR AVAILABLE.
2. ASSEMBLE CONNECTORS, ITEM 5 & 8, PER NASA/JSC PRC-7003 AND PER MANUFACTURER'S INSTRUCTIONS. TORQUE ALL BACKSHELLS TO 10" LBS ±1" LBS.
1. MARK AND IDENTIFY PER NASA/JSC PRC-9002, ON LABEL, ITEM 15, USING INK MARKER, ITEM 23. (S/N TO START WITH 1001, CONTACT DWG. CONTROL FOR NEXT AVAILABLE S/N, DOCUMENT ON TPS.)

NOTES: LOCATE APPROX. AS SHOWN.

-301 PART NUMBER	DESCRIPTION	REF/DES	MATERIAL	MFR/SPECIFICATION	ITEM
AR	VC-3	THREAD LOCK	ADHESIVE	ND INDUSTRIES TROY, MI	24
AR	35001	INK MARKER	INK, BLACK, PERMANENT	SANFORD CORP. BELLWOOD, IL	23
6 IN.	RNF-150-3/32	SHRINK TUBING	FLUOROPOLYMER MIL-DTL-23053/'8	RAYCHEM MENLO PARK, CA	22
6	300.636	FERRULE, CRIMP	TEFLON OVER STAINLESS STEEL	W.W. FISHER ATLANTA, GA	21
2 FT.	MIL-DTL-23053/13-1/8-0	SHRINK TUBING	VITON	MIL-DTL-23053/13	20
1 FT.	2166	WIRE BRAID 1/8 INCH	COPPER/SILVER	ALPHA WIRE ELIZABETH, N.J.	19
2 FT.	2162	WIRE BRAID 1/16 INCH	COPPER/SILVER	ALPHA WIRE ELIZABETH, N.J.	18
2	3M-69-1	TAPE	GLASS CLOTH	3M CORP. ST. PAUL, MN	17
8 FT.	3> M22759/11-24-X	WIRE 24 AWG	TFE, SILVER/COPPER	MIL-W 22759/11	16
4	TMS-SCE-1/4. 2.0-9	SHRINK LABEL	POLYOLEFIN MIL-DTL-23053/5	RAYCHEM MENLO PARK, CA	15
1 FT.	MIL-DTL-23053/13-1/4-0	SHRINK TUBING	VITON	MIL-DTL-23053/13	14
1	E4103.190.1	STRAIN RELIEF, WHITE	D3	BRASS/NICKEL ELEXAR	W.W. FISHER ATLANTA, GA	13
1	E4103.190.5	STRAIN RELIEF, YELLOW	D2	BRASS/NICKEL ELEXAR	W.W. FISHER ATLANTA, GA	12
1	E4103.190.6	STRAIN RELIEF, RED	D1	BRASS/NICKEL ELEXAR	W.W. FISHER ATLANTA, GA	11
3	103.1943	DUST CAP	D1, D2, D3	BRASS/NICKEL	W.W. FISHER ATLANTA, GA	10
3	E31103.1/6.7+B	CABLE CLAMP	D1, D2, D3	BRASS/NICKEL	W.W. FISHER ATLANTA, GA	9
3	K103Z057-150	CONNECTOR CABLE END	D1, D2, D3	POLYBUTYLENE-TEREPHTHALATE	W.W. FISHER ATLANTA, GA	8
1	GMA.1B.054.DV	STRAIN RELIEF	D0	DESMOPAN 786	LEMO SANTA ROSA, CA.	7
1	BFG.1B.100.PCSG	PLUG CAP	D0	GRAY ULTRAFORM, POLYAMIDE, SILICONE	LEMO SANTA ROSA, CA.	6
1	FGG.1B.305.CLAD.727	CONNECTOR, CABLE END	D0	BRASS/CHROME	LEMO SANTA ROSA, CA.	5
2 FT	2027/ST/BLK	CABLE LANYARD		TEFLON OVER STAINLESS STEEL	W.W. FISHER ATLANTA, GA	4
						3
						2
-301	CABLE ASSY. ANALOG DATA					1

DIMENSIONAL TOLERANCE UNLESS NOTED OTHERWISE: .0 ± 0.5, .00 ± 0.10, .000 ± .005, ANGULAR ± 0°-30'
SURFACE FINISH IN MICROINCHES RMS UNLESS NOTED OTHERWISE
FRACTURE CRITICAL: ☐ YES ☒ NO
NEXT ASSY: SEG46115090
FILE NAME: F310008
☒ FLT HDWR APPLICABLE GSK
☐ OTHER (SPECIFY)

SIGNATURES	DATE
DR	
ENG	
CH	
APP	
QE	
MATL	
STRESS	
AUTH	

WYLE LABORATORIES
LIFE SCIENCES, SYSTEMS AND SERVICES HOUSTON, TEXAS

CABLE ASSEMBLY, INTERFACE, ANALOG DATA

PROJECT: CONTINUOUS BLOOD PRESSURE DEVICE

SIZE	CODE ID NO	DWG NO	REV
D	5H-755	KLSF310008	A

SCALE N.T.S. ORG SD SHEET 1 OF 1