LTR	ZONE	REVISION	DATE	EQUIP TYPE	APPROVAL

-301	-603	-602	-601	PART NUMBER	DESCRIPTION	MATERIAL	SPECIFICATION	ITEM
	AR	AR	AR AR	SL-12	INK PEN	INK, SILVER	FISHER PEN CO. FOREST PARK, IL	39
	AR	AR	AR AR	35001	INK MARKER	INK, BLACK, PERMANENT	SANFORD CORP. BELLWOOD, IL	38
	AR	AR	AR AR	30-NF	EDGE-LOCK	ADHESIVE, WATER BASE, FAST BOND, NATURAL	3M CORP. ST. PAUL, MN	37
	AR	AR	AR AR	MIL-T-43636	THREAD SIZE "E"	NOMEX, NATURAL		36
			AR	MIL-T-43636	THREAD SIZE "B"	NOMEX, NATURAL		35
		1		SR2	BUCKLE FASTEX	ACETAL	ITW NEXAS WOODDALE, IL	34
		2		9476-1/2"	TAPE	NOMEX, NATURAL .5 X 5.25	BALLY RIBBON MILLS BALLY, PA	33
		1		9981-2"	BELT	WEEBBING, NOMEX, NATURAL 2 X 106 (2 X 53 FOLDED)	BALLY RIBBON MILLS BALLY, PA	32
			1	TEFLON FEP 500A	POCKET WINDOW	TEFLON CLEAR, 5 MIL 1 X 3 (1 X 1.5 FOLDED)	DUPONT CO WILMINGTON, DE	31
			1	TEFLON FEP 500A	POCKET WINDOW	TEFLON CLEAR, 5 MIL .5 X 6 (.5 X 3 FOLDED)	DUPONT CO WILMINGTON, DE	30
			2	TEFLON FEP 500A	POCKET WINDOW	TEFLON CLEAR, 5 MIL 1 X 4.75 (1 X 2.375 FOLDED)	DUPONT CO WILMINGTON, DE	29
			1	BS12402-K1105	"BABY DURABLE" EYELET	STAINLESS STEEL	TRW TUCKER, GA	28
			1	BS12303 K1105	"BABY DURABLE" STUD	STAINLESS STEEL	TRW TUCKER, GA	27
			1	XX12206 K1105	"BABY DURABLE" SOCKET	STAINLESS STEEL	TRW TUCKER, GA	26
			1	X212108 K1105	"BABY DURABLE" CAP	STAINLESS STEEL	TRW TUCKER, GA	25
			3	XX10224 K1105	"DURABLE" SOCKET	STAINLESS STEEL	TRW TUCKER, GA	24
			3	X210127 K1105	"DURABLE" CAP	STAINLESS STEEL	TRW TUCKER, GA	23
			1	9476-1/2"	TAPE	NOMEX, NATURAL .5 X 5	BALLY RIBBON MILLS BALLY, PA	22
			1	-006	PADDING	DURETTE P/N F-400-11 3.25 X 5.25	FILTRATION SYSTEM PROD. INC ST LOUS, MO	21
			1	-005	FABRIC	NOMEX, ROYAL BLUE P/N 650 4.25 X 11.5	TRAVIS MILLS NEW YORK, NY	20
			1	-004	PADDING	DURETTE P/N F-400-11 8.6875 X 19	FILTRATION SYSTEM PROD. INC ST LOUS, MO	19
			2	-003	FABRIC	NOMEX, ROYAL BLUE P/N 650 10 X 20.125	TRAVIS MILLS NEW YORK, NY	18
			3	BS10412-K1105	"DURABLE" EYELET	STAINLESS STEEL	TRW TUCKER, GA	17
			3	BS10370 K1105	"DURABLE" STUD	STAINLESS STEEL	TRW TUCKER, GA	16
			4	SS1100	ELASTIC	POLYESTER BRAID, WHITE 1 X 2.5	LEFF BROTHERS HOUSTON, TX	15
		1	3	9476-1"	TAPE	NOMEX, NATURAL 1 X 1.125	BALLY RIBBON MILLS BALLY, PA	14
			1	TEFLON FEP 500A	POCKET WINDOW	TEFLON CLEAR, 5 MIL 1.625 X 6 (1.625 X 3 FOLDED)	DUPONT CO WILMINGTON, DE	13
			2	TEFLON FEP 500A	POCKET WINDOW	TEFLON CLEAR, 5 MIL 1 X 6 (1 X 3 FOLDED)	DUPONT CO WILMINGTON, DE	12
			1	9981-2"	WEBBING	NOMEX, NATURAL 2 X 3.5	BALLY RIBBON MILLS BALLY, PA	11
			1	9981-2"	WEBBING	NOMEX, NATURAL 2 X 4	BALLY RIBBON MILLS BALLY, PA	10
			1	-002	PADDING	DURETTE P/N F-400-11 7.0625 X 33.5	FILTRATION SYSTEM PROD. INC ST LOUS, MO	9
			1	-001	FABRIC	NOMEX, ROYAL BLUE P/N 650 15 X 34.5 (7.5 X 34.5 FOLDED)	TRAVIS MILLS NEW YORK, NY	8
								7
								6
								5
X				-301	WASTE BELT ASSEMBLY			4
1	X			-603	BELT ASSEMBLY			3
1		X		-602	POUCH ASSEMBLY, BACK			2
1			X	-601	POUCH ASSEMBLY, FRONT			1

14.

DIMENSIONAL TOLERANCE :					
LENGTH	0-.5	.5-1.5	1.5-10	1.5-10	OVER 20
TOLERANCE	±.06	±.12	±.25	±.25	± 5

13. BAG AND MARK PER JSC PRC-9002A, PARA. 3.3.10.
12. CLEAN PER JHB 5322, PARA. 12.1.3, LEVEL G.C.
11. SEAM ALLOWANCES .50-INCH ALL AROUND.
10. USE FISHER SILVER INK PEN, ITEM 39, FOR MARKING FABRIC, AS REQ'D.
9. HAND STITCHING IS ACCEPTABLE AT ANY POINT IN ASSEMBLY WHERE FABRICATION TIME AND/OR QUALITY INDICATE ITS USE.
8. PREPARE FABRIC, EDGE-LOCK RAW EDGES, WITH FAST-BOND, ITEM 37, PER WI SGF-002. ALSO SEAL ALL CUTOUTS
7. BACK STITCHING MINIMUM .50-INCH FOR LOCK.
6. ALL TOP STITCHING TO BE .13-INCH FROM EDGE OF FABRIC.
5. STITCHES TO BE 6-8 PER 1-INCH, TYPE 301, FEDERAL STANDARD 751.
4. ACCEPTANCE CRITERIA FOR SEAMS AND STITCHES PER CSD-A-533.
3. ALL DIMENSIONS ARE IN INCHES. REFERENCE DIMENSIONS, ARE WITHIN ( ).
2. INTERPRET PER JPG 8000.4C
1. THIS FLIGHT ITEM IS NOT FRACTURE CRITICAL.

NOTES: UNLESS OTHERWISE SPECIFIED

2 SEAL RAW EDGES OF ALL TAPES AND WEBBINGS, ITEMS 10, 11, 14, 22, 32 & 33, USING HOT KNIFE.

1 MARK AND IDENTIFY PER JSC PRG-9002A, PARA. 3.3.8.1, USING INK MARKER, ITEM 38. LOCATE APPROX. AS SHOWN.

NOTES:

DIMENSIONAL TOLERANCE UNLESS NOTED OTHERWISE
.0 ± .1 .000 ± .005
.00 ± .01 ANGULAR ± .5°

SURFACE FINISH IN MICROMETERS RMS UNLESS NOTED OTHERWISE

FRACTURE CRITICAL ☐ YES ☒ NO

NEXT ASSY SED46115090

FILE NAME F310001

EQUIPMENT TYPE ☒ FLT HDWR ☐ APPLICABLE GSE ☐ OTHER (SPECIFY)

SIGNATURES	DATE
DR	
ENG	
CH	
APP	
QE	
MATL	
STRESS	
AUTH	
OFFICIAL RELEASE	

NATIONAL AERONAUTICS & SPACE ADMINISTRATION
LYNDON B. JOHNSON SPACE CENTER HOUSTON, TEXAS

BELT ASSEMBLY

PROJECT CBPD REV

SIZE D CODE IDENT NO 21356 DWG NO KLSF310001

SCALE 1/1 SHEET 1 OF 4

LTR	ZONE	REVISION	DATE	EQUIP TYPE	APPROVAL

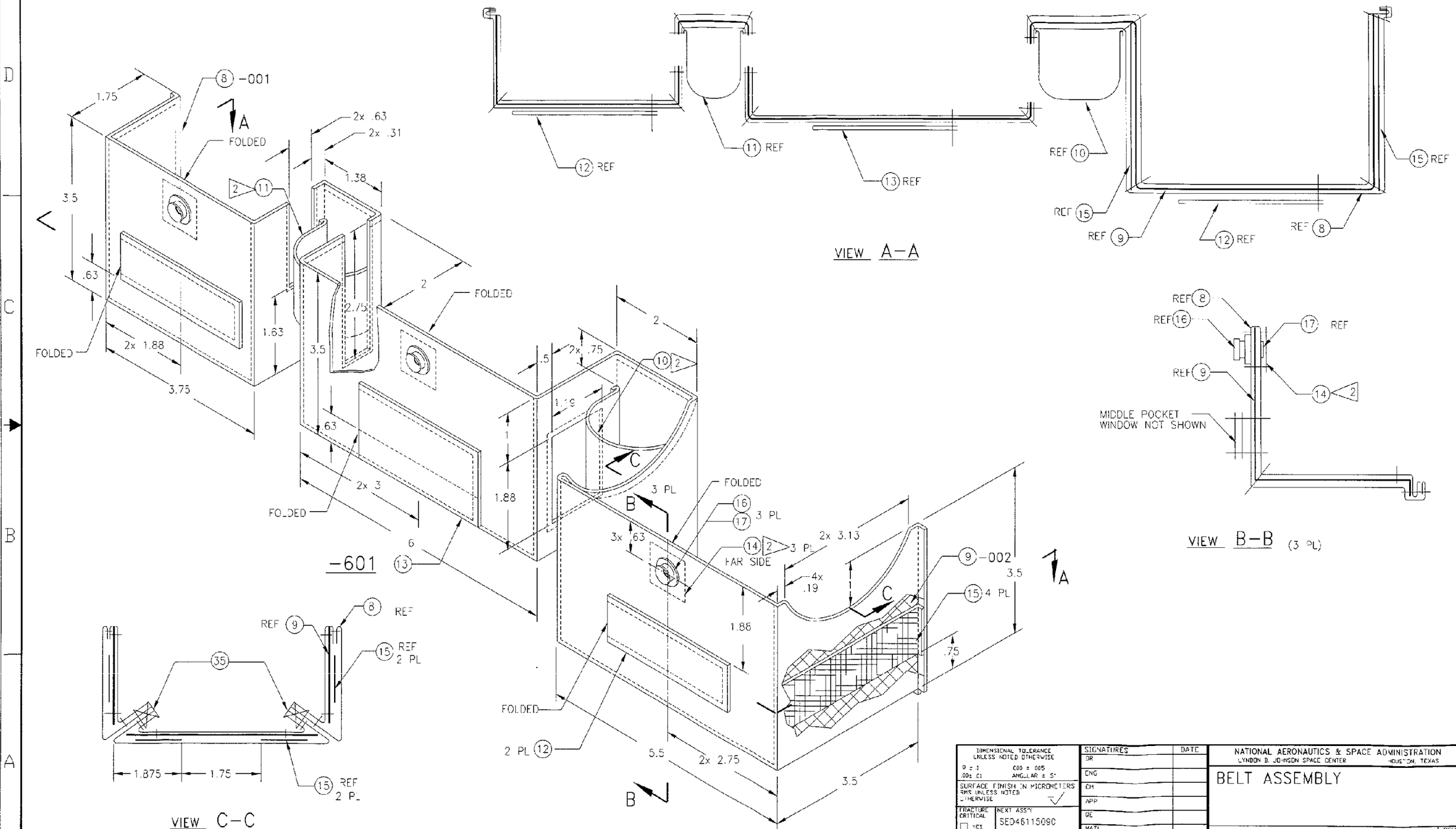

DIMENSIONAL TOLERANCE UNLESS NOTED OTHERWISE	SIGNATURES	DATE
.0 ± .1 .00 ± .01 .000 ± .005 ANGULAR ± .5°	DR	
SURFACE FINISH IN MICROMETERS RMS UNLESS NOTED OTHERWISE	ENG	
FRACTURE CRITICAL ☐ YES ☒ NO	CH	
NEXT ASSY SED46115090	APP	
FILE NAME F310001	QE	
EQUIPMENT TYPE ☒ FLT HDWR ☐ APPLICABLE GSE ☐ OTHER (SPECIFY)	MATL	
	STRESS	
	AUTH	
	OFFICIAL RELEASE	

NATIONAL AERONAUTICS & SPACE ADMINISTRATION
LYNDON B. JOHNSON SPACE CENTER HOUSTON, TEXAS

BELT ASSEMBLY

PROJECT: CBPD

REV

SIZE: D | CODE IDENT NO: 21356 | DWG NO: KLSF310001

SCALE 1/1 | SHEET 2

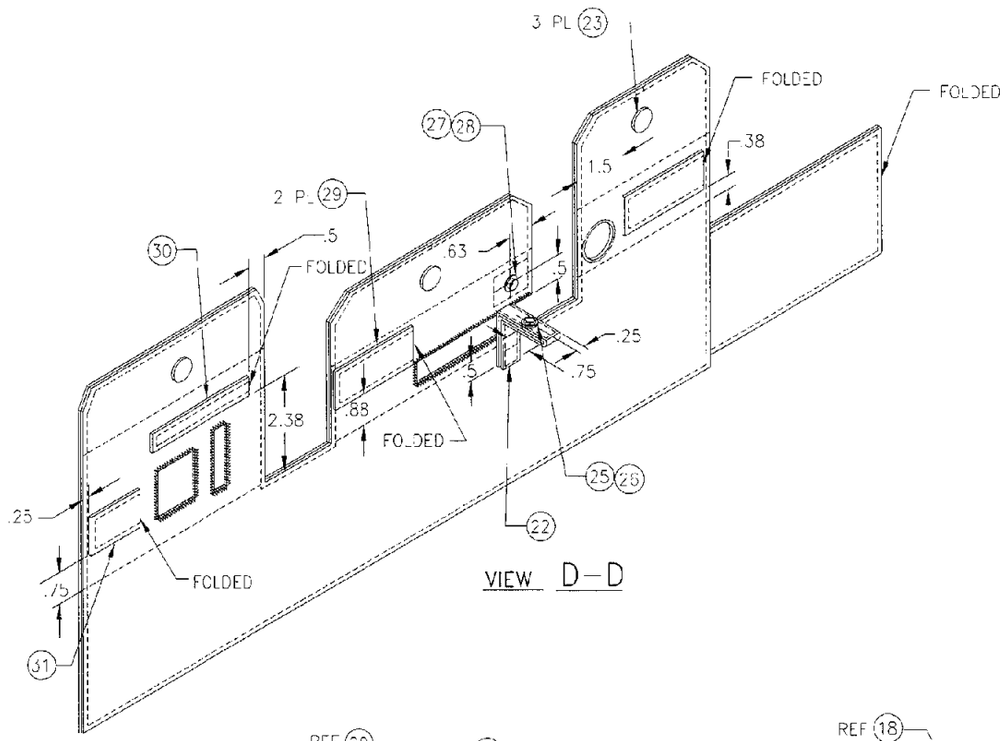

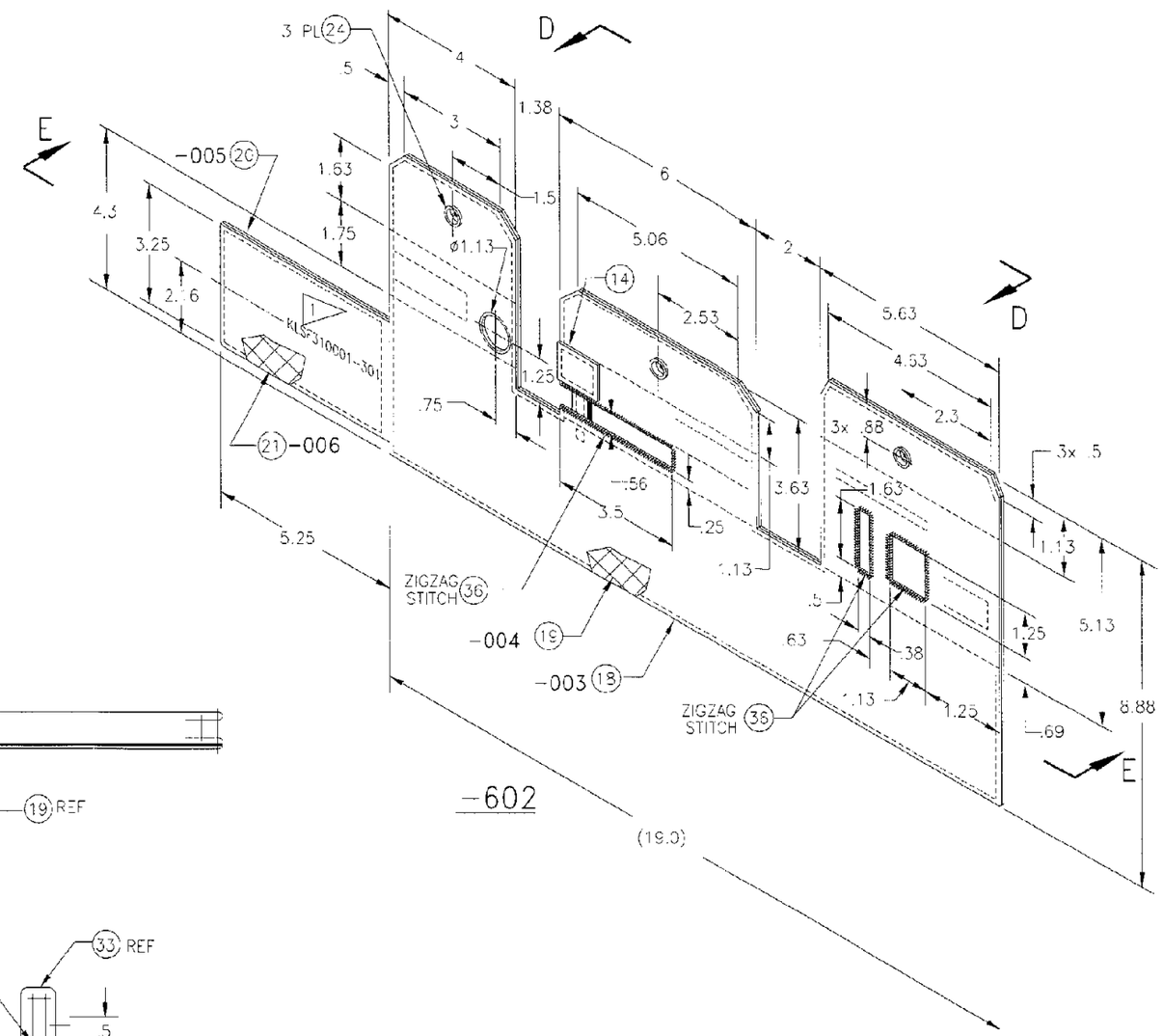

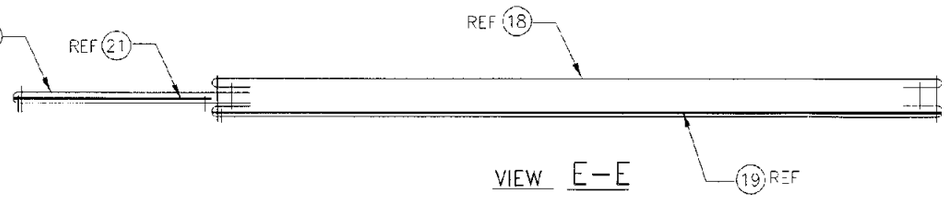

VIEW E-E

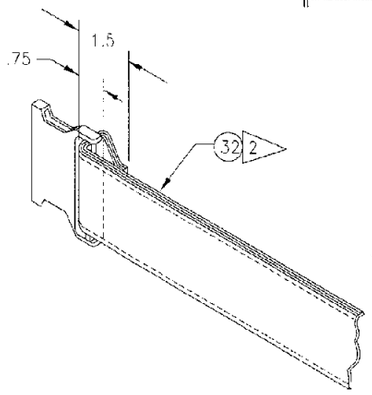

-602

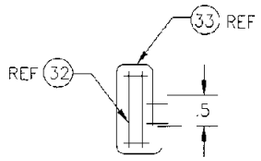

VIEW F-F

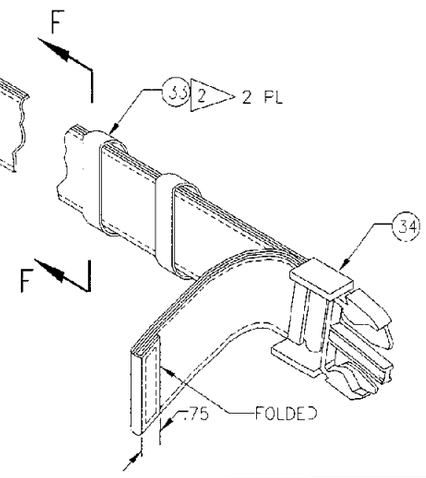

-603

LTR	ZONE	REVISION	DATE	EQUIP TYPE	APPROVAL

DIMENSIONAL TOLERANCE UNLESS NOTED OTHERWISE
.0 ± .1 .000 ± .005
.00 ± .01 ANGULAR ± .5°

SURFACE FINISH IN MICROMETERS RMS UNLESS NOTED OTHERWISE

FRACTURE CRITICAL
☐ YES
☒ NO

NEXT ASSY SED46115090

FILE NAME F310001

EQUIPMENT TYPE
☒ FLT HDWR ☐ APPLICABLE GSE
☐ OTHER (SPECIFY)

SIGNATURES	DATE
DR	
ENG	
CH	
APP	
CE	
MATL	
STRESS	
AUTH	
OFFICIAL RELEASE	

NATIONAL AERONAUTICS & SPACE ADMINISTRATION
LYNDON B. JOHNSON SPACE CENTER HOUSTON, TEXAS

BELT ASSEMBLY

PROJECT CBPD REV

SIZE D CODE IDENT NO 21356 DWG NO KLSF310001

SCALE 1/2 SHEET 3

DR97-059

LTR	ZONE	REVISION	DATE	EQUIP TYPE	APPROVAL

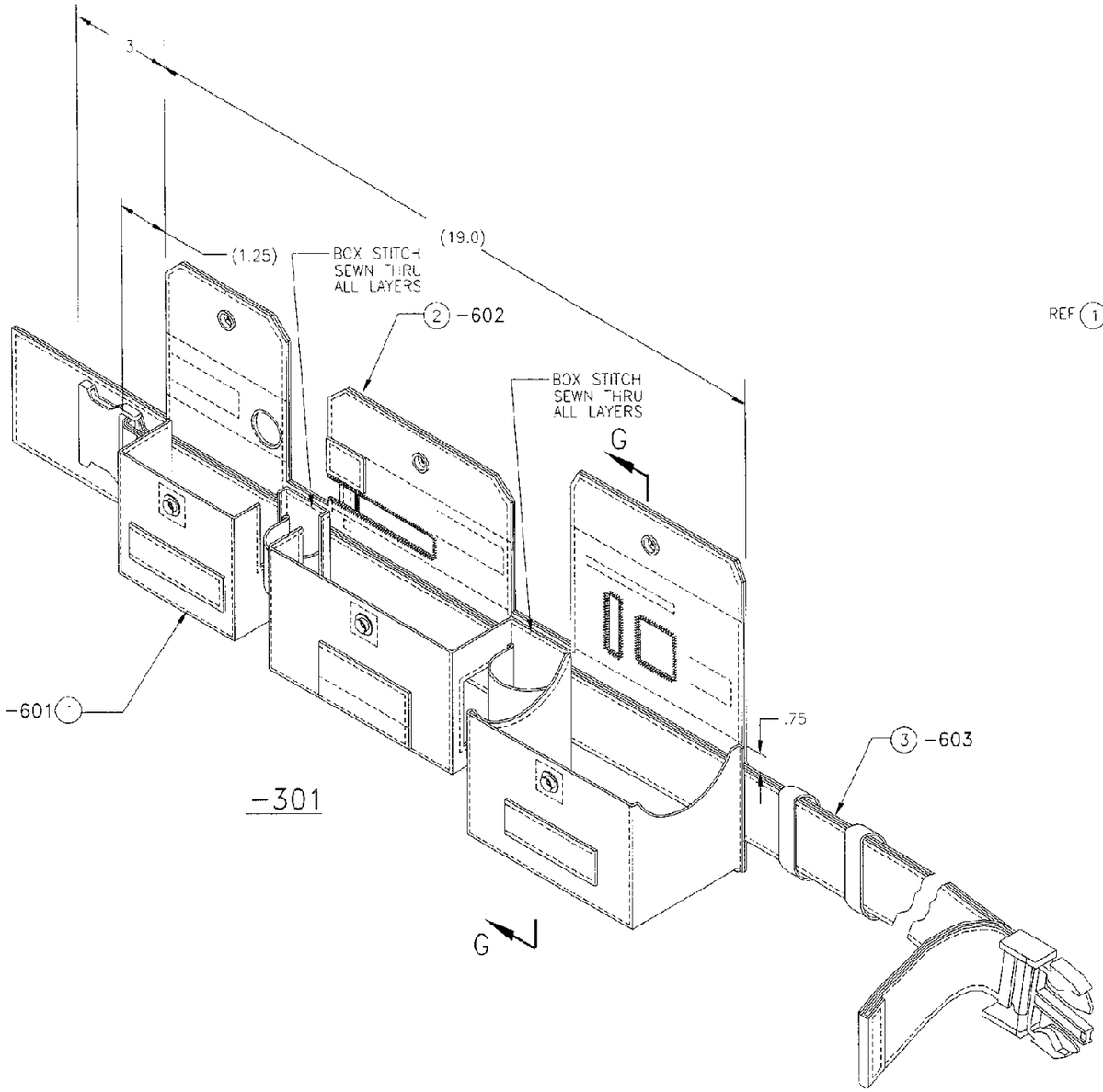

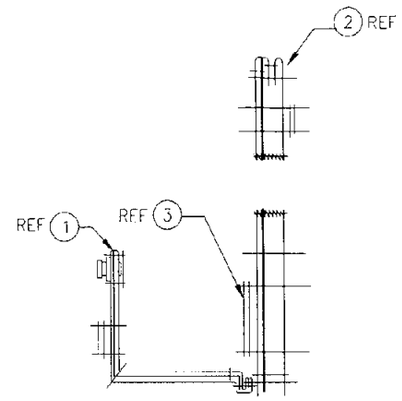

VIEW G-G

DIMENSIONAL TOLERANCE UNLESS NOTED OTHERWISE	SIGNATURES	DATE
.0 ± .1 .000 ± .005 .00± .01 ANGULAR ± 5°	DR	
SURFACE FINISH IN MICROMETERS RMS UNLESS NOTED OTHERWISE	ENG	
FRACTURE CRITICAL ☐ YES ☒ NO	CH	
NEXT ASS'Y SED46115090	APP	
FILE NAME F310001	QE	
EQUIPMENT TYPE ☒ FLT HDWR ☐ APPLICABLE GSE ☐ OTHER (SPECIFY)	MAT'L	
	STRESS	
	AUTH	
	OFFICIAL RELEASE	

NATIONAL AERONAUTICS & SPACE ADMINISTRATION
LYNDON B. JOHNSON SPACE CENTER HOUSTON, TEXAS

BELT ASSEMBLY

PROJECT	REV
CBPD	

SIZE	CODE IDENT NO	DWG NO.
D	21356	KLSF310001

SCALE 1/2 SHEET 4

DR97-059