REV	ZONE	DESCRIPTION OF CHANGE

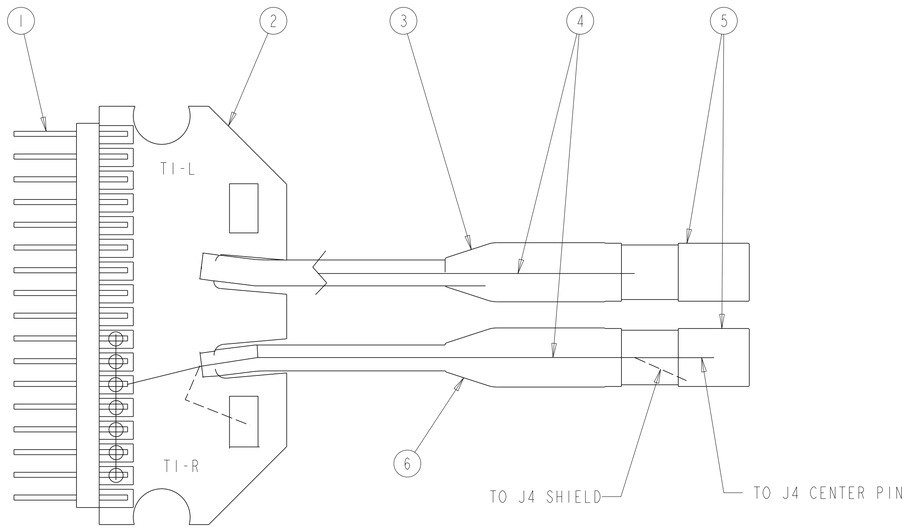

J1

TOP VIEW (RIGHT FOOT)

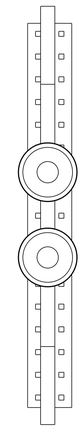

-302

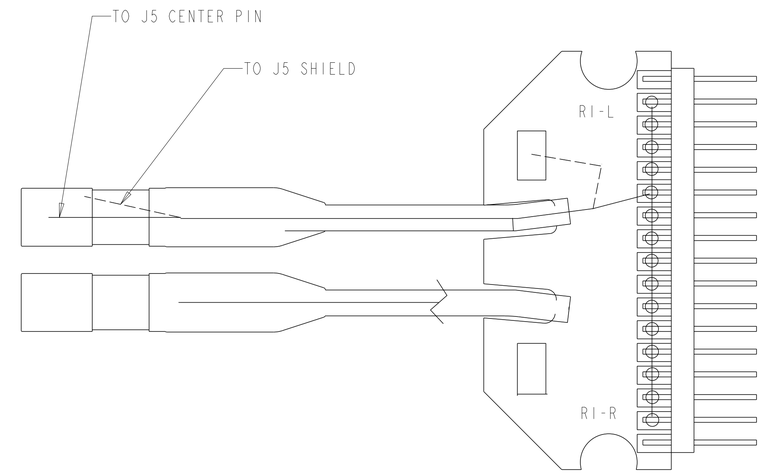

J1

BOTTOM VIEW (RIGHT FOOT)

Total Force Foot Ground Interface Wiring Diagram
Wire List - Right Foot

FUNCTION	FROM	PIN	FUNCTION	TO	PIN	NOTES
RA	J1	16	TRANSMIT	J4	CENTER	COAX
RB	J1	15	TRANSMIT	J4	CENTER	COAX
RC	J1	14	TRANSMIT	J4	CENTER	COAX
RD	J1	13	TRANSMIT	J4	CENTER	COAX
RE	J1	12	TRANSMIT	J4	CENTER	COAX
RF	J1	11	TRANSMIT	J4	CENTER	COAX
RG	J1	10	TRANSMIT	J4	CENTER	COAX
R1	J1	19	RECEIVE	J5	CENTER	COAX
R2	J1	20	RECEIVE	J5	CENTER	COAX
R3	J1	21	RECEIVE	J5	CENTER	COAX
R4	J1	22	RECEIVE	J5	CENTER	COAX
R5	J1	23	RECEIVE	J5	CENTER	COAX
R6	J1	24	RECEIVE	J5	CENTER	COAX
R7	J1	25	RECEIVE	J5	CENTER	COAX
R8	J1	26	RECEIVE	J5	CENTER	COAX
R9	J1	27	RECEIVE	J5	CENTER	COAX
R10	J1	28	RECEIVE	J5	CENTER	COAX
R11	J1	29	RECEIVE	J5	CENTER	COAX
R12	J1	30	RECEIVE	J5	CENTER	COAX
R13	J1	31	RECEIVE	J5	CENTER	COAX
R14	J1	32	RECEIVE	J5	CENTER	COAX
R15	J1	33	RECEIVE	J5	CENTER	COAX
SHIELD	J1	LGT	SHIELD	J5	SHIELD	COAX

QTY	PART NUMBER	DESCRIPTION	MATERIAL	SPECIFICATION	ITEM
2	101.846	BEND RELIEF, WHITE	THERMOPLASTIC ELASTOMER	FISCHER CONN. ATLANTA, GA	5
2	K 101 A004/2	CONNECTOR, STRAIGHT RECEPTACLE	NICKEL PLATED		5
AR	RG-188	CABLE, COAXIAL		APLHA WIRE	4
2	101.847	BEND RELIEF, BLACK	THERMOPLASTIC ELASTOMER	FISCHER CONN. ATLANTA, GA	3
1		MOUNT, PCB		NOVEL, GmBH MUNICH, GERMANY	2
1		CONNECTOR, 34 PIN		NOVEL, GmBH MUNICH, GERMANY	1
-302		ASSEMBLY, RIGHT FOOT			
	-301	ASSEMBLY, LEFT FOOT			

1 RUBBER STAMP PART NUMBER AND SERIAL NUMBER IN 1/8 HIGH GOTHIC CHARACTERS PER NASA/JSC PRC-9002. LOCATE APPROXIMATELY AS SHOWN.

FLAG NOTES

5. BREAK ALL SHARP EDGES AND ROUND ALL CORNERS TO .02 - .04 R.
4. ALL DIMENSIONS ARE IN INCHES/POUNDS.
3. CLEAN PER NASA/JSC PRC-5001 TO LEVEL GC.
2. FABRICATION TOLERANCES AND PRACTICES PER SKZ-36103755.
1. INTERPRET PER JPG 8500.4.

NOTES: UNLESS OTHERWISE SPECIFIED

DIMENSIONAL TOLERANCE UNLESS NOTED OTHERWISE
.0 ± .1 .000 ± .005
.00 ± .02 ANGULAR ± .5°

SURFACE FINISH IN MICROINCHES RMS UNLESS NOTED OTHERWISE TBD

FRACTURE CRITICAL ☐ YES ☒ NO

NEXT ASSY TBD

DWG FILENAME SIG46118262.DRW

☒ FLT HDWR ☐ APPLICABLE GSE
☐ OTHER (SPECIFY) _____

SIGNATURES		DATE
DR	PC NEWLIN	08-Jan-01
ENG	TBD	
CH		
APP	T. APPROVER	99/99/99
QE	T. QE	99/99/99
MATL	T. MATERIALS	99/99/99
STRESS	T. STRESS	99/99/99
AUTH	T. AUTHORIZER	99/99/99
	TEST APP	99/99/99

NATIONAL AERONAUTICS AND SPACE ADMINISTRATION

LYNDON B. JOHNSON SPACE CENTER HOUSTON, TEXAS

WIRING DIAGRAM, TF-FGI INSOLE ASSEMBLY RIGHT & LEFT FOOT

PROJECT

SIZE	CODE IDENT NO	DWG NO	REV
D	21356	SIG46118262	TST
SCALE 1:1	ORG EA5	SHEET 1 OF 2	

STATUS: Check for DCNs against the drawing.

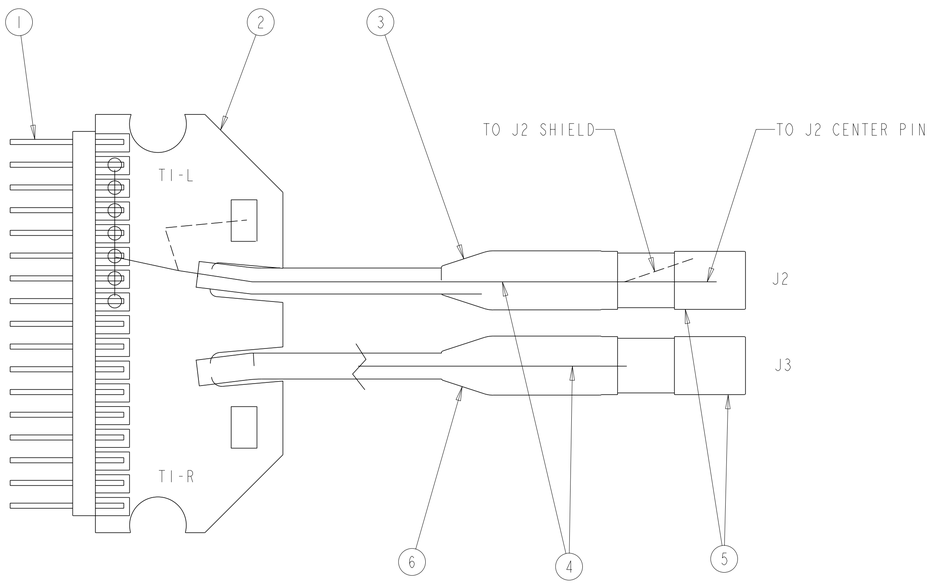

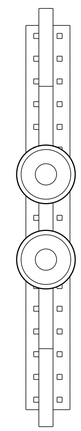

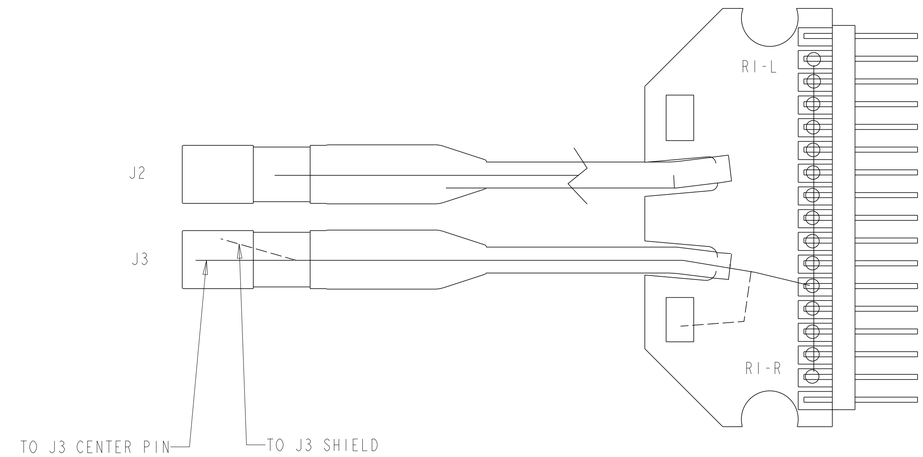

-301

J1

TOP VIEW (LEFT FOOT)

SCALE 3:1

J1

BOTTOM VIEW (LEFT FOOT)

Total Force Foot Ground Interface Wiring Diagram
Wire List - Left Foot

FUNCTION	FROM	PIN	FUNCTION	TO	PIN	NOTES
LA	J1	2	TRANSMIT	J2	CENTER	COAX
LB	J1	3	TRANSMIT	J2	CENTER	COAX
LC	J1	4	TRANSMIT	J2	CENTER	COAX
LD	J1	5	TRANSMIT	J2	CENTER	COAX
LE	J1	6	TRANSMIT	J2	CENTER	COAX
LF	J1	7	TRANSMIT	J2	CENTER	COAX
LG	J1	8	TRANSMIT	J2	CENTER	COAX
L1	J1	33	RECEIVE	J3	CENTER	COAX
L2	J1	32	RECEIVE	J3	CENTER	COAX
L3	J1	31	RECEIVE	J3	CENTER	COAX
L4	J1	30	RECEIVE	J3	CENTER	COAX
L5	J1	29	RECEIVE	J3	CENTER	COAX
L6	J1	28	RECEIVE	J3	CENTER	COAX
L7	J1	27	RECEIVE	J3	CENTER	COAX
L8	J1	26	RECEIVE	J3	CENTER	COAX
L9	J1	25	RECEIVE	J3	CENTER	COAX
L10	J1	24	RECEIVE	J3	CENTER	COAX
L11	J1	23	RECEIVE	J3	CENTER	COAX
L12	J1	22	RECEIVE	J3	CENTER	COAX
L13	J1	21	RECEIVE	J3	CENTER	COAX
L14	J1	20	RECEIVE	J3	CENTER	COAX
L15	J1	19	RECEIVE	J3	CENTER	COAX
SHIELD	J1	LGT	SHIELD	J3	SHIELD	COAX

SIZE	CODE ID NO	DWG NO	REV
D	21356	SIG46118262	TST
SCALE 1:1	ORG EA5	SHEET 2 OF 2	