REV	ZONE	DESCRIPTION OF CHANGE

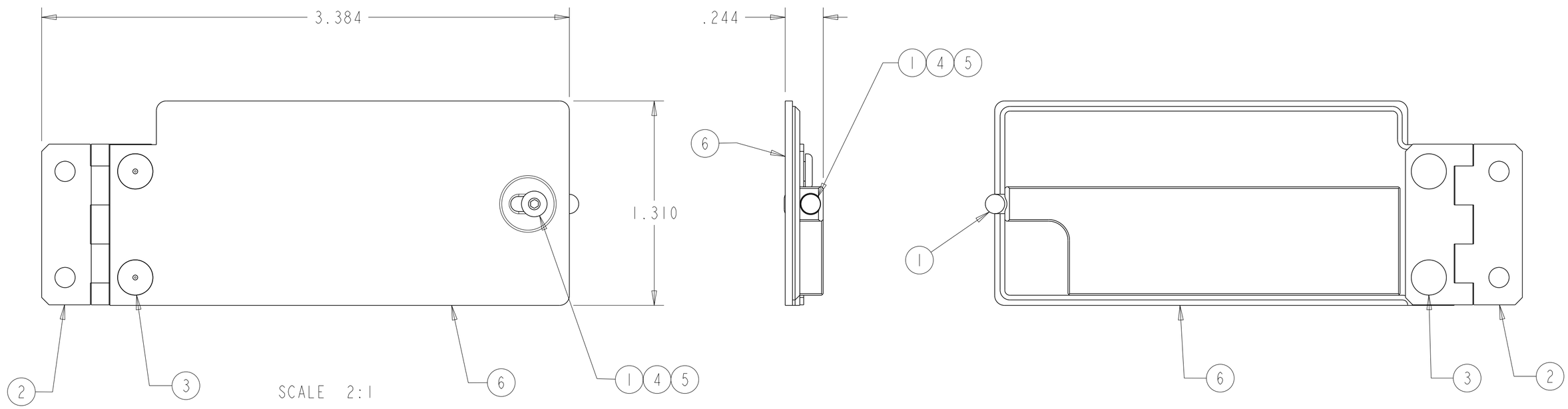

1 RUBBER STAMP PART NUMBER AND SERIAL NUMBER IN 1/8 HIGH GOTHIC CHARACTERS PER NASA/JSC PRC-9002. LOCATE APPROXIMATELY AS SHOWN.

FLAG NOTES

5. BREAK ALL SHARP EDGES AND ROUND ALL CORNERS TO .02 - .04 R.
4. ALL DIMENSIONS ARE IN INCHES/POUNDS.
3. CLEAN PER NASA/JSC PRC-5001 TO LEVEL GC.
2. FABRICATION TOLERANCES AND PRACTICES PER SKZ-36103755.
1. INTERPRET PER JPG 8500.4.

NOTES: UNLESS OTHERWISE SPECIFIED

QTY	PART NUMBER	DESCRIPTION	MATERIAL	SPECIFICATION	ITEM

DIMENSIONAL TOLERANCE UNLESS NOTED OTHERWISE
.0 ± 0.1 .000 ± 0.005
.00 ± 0.02 ANGULAR ± 0.5°

SURFACE FINISH IN MICROINCHES RMS UNLESS NOTED OTHERWISE 125√

FRACTURE CRITICAL
[ ] YES
[X] NO

NEXT ASSY TBD

DWG FILENAME SEG46118337.DRW

[X] FLT HDWR [ ] APPLICABLE GSE
[ ] OTHER (SPECIFY) _____

SIGNATURES		DATE
DR	PC NEWLIN	19-Dec-00
ENG	TBD	
CH		
APP	T. APPROVER	99/99/99
QE	T. QE	99/99/99
MATL	T. MATERIALS	99/99/99
STRESS	T. STRESS	99/99/99
AUTH	T. AUTHORIZER	99/99/99
	TEST APP	99/99/99

NATIONAL AERONAUTICS AND SPACE ADMINISTRATION

LYNDON B. JOHNSON SPACE CENTER HOUSTON, TEXAS

ASSEMBLY, BATTERY DOOR
TOTAL FORCE FOOT GROUND INTERFACE BOX

PROJECT

SIZE	CODE IDENT NO	DWG NO	REV
C	21356	SEG46118337	TST
SCALE 1:1	ORG EA5	SHEET 1 OF 1	

PRELIMINARY

STATUS: Check for DCNs against the drawing.