REV	ZONE	DESCRIPTION OF CHANGE

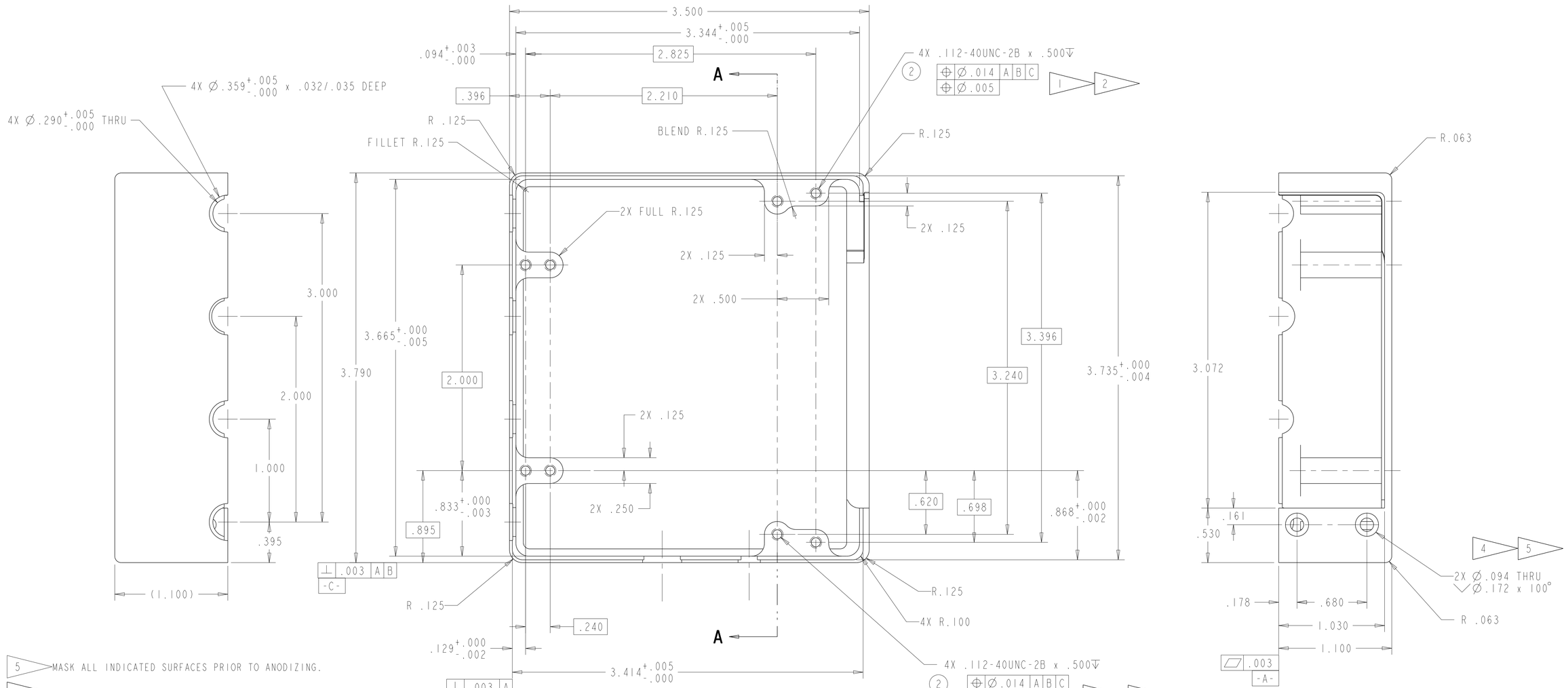

5 MASK ALL INDICATED SURFACES PRIOR TO ANODIZING.

4 CHEMICAL FILM INTERNAL SURFACES

3 ANODIZE PER NASA/JSC PRC-5006, TYPE II, CLASS 2, DYED: TURQUOISE REF FED-STD-595, COLOR SPECIFICATION #15187.

2 MASK INSERTS DURING ANY OPERATIONS THAT MAY INDUCE CONTAMINATES INTO INSERTS.

1 INSTALL INSERTS PER NASA/JSC PRC 9008. SEAL INSERTS WITH SUPER KOROPON PRIMER BASE PER NASA/JSC PRC 4004.

FLAG NOTES

7. THIS ASSEMBLY DOES NOT CONTAIN FRACTURE CRITICAL PARTS.
6. BAG AND TAG TO IDENTIFY PART NUMBER PER NASA/JSC PRC-9002.
5. CLEAN ALL SURFACES TO LEVEL GC PER NASA/JSC PRC-5001.
4. BREAK ALL SHARP EDGES .010-.020 & ROUND ALL CORNERS TO .02-.04.
3. ALL DIMENSIONS ARE IN INCHES.
2. FABRICATION TOLERANCES AND PRACTICES PER DWG SKZ36103755.
1. INTERPRET DRAWING PER JPG 8500.4, ENGINEERING DRAWING SYSTEM MANUAL.

NOTES: UNLESS OTHERWISE SPECIFIED

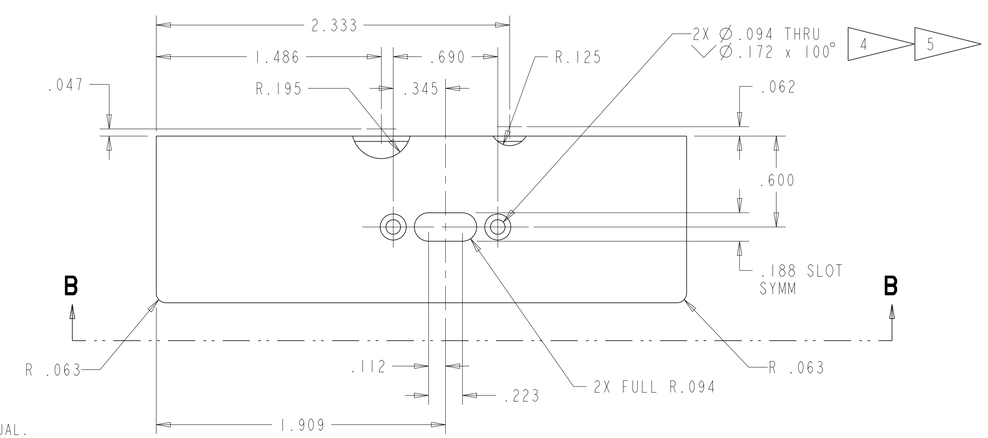

-001 3

QTY	PART NUMBER	DESCRIPTION	MATERIAL	SPECIFICATION	ITEM
AR	515-700	EPOXY BASE PRIMER SUPER KOROPON			3
12	MS21209C0420L	THREAD INSERT, .112-40UNC x .224 LG			2
1	-001	ENCLOSURE, MAIN TF-FGI	AL ALY, 6061-T651 1.75 x 4.0 x 4.25	QQ-A-250/11	1
X	-301	ENCLOSURE ASY			X

DIMENSIONAL TOLERANCE UNLESS NOTED OTHERWISE .0 ± .1 .000 ± .005 .00 ± .02 ANGULAR ± .5°

SURFACE FINISH IN MICROINCHES RMS UNLESS NOTED OTHERWISE 125

FRACTURE CRITICAL ☐ YES ☒ NO

NEXT ASSY SEG46118240

DWG FILENAME SEG46118332.DRW

☒ FLT HDWR ☐ APPLICABLE GSE ☐ OTHER (SPECIFY) _____

SIGNATURES		DATE
DR	PC NEWLIN	22-Dec-00
ENG	PC NEWLIN	22-Dec-00
CH		
APP	T. APPROVER	99/99/99
QE	T. QE	99/99/99
MATL	T. MATERIALS	99/99/99
STRESS	T. STRESS	99/99/99
AUTH	T. AUTHORIZER	99/99/99
	TEST APP	99/99/99

NATIONAL AERONAUTICS AND SPACE ADMINISTRATION

LYNDON B. JOHNSON SPACE CENTER HOUSTON, TEXAS

ENCLOSURE, MAIN TF-FGI BOX

PROJECT

SIZE D | CODE IDENT NO 20356 | DWG NO SEG46118332 | REV TST

SCALE N/A | ORG EA5 | SHEET 1 OF 3

STATUS: Check for DCNs against the drawing.

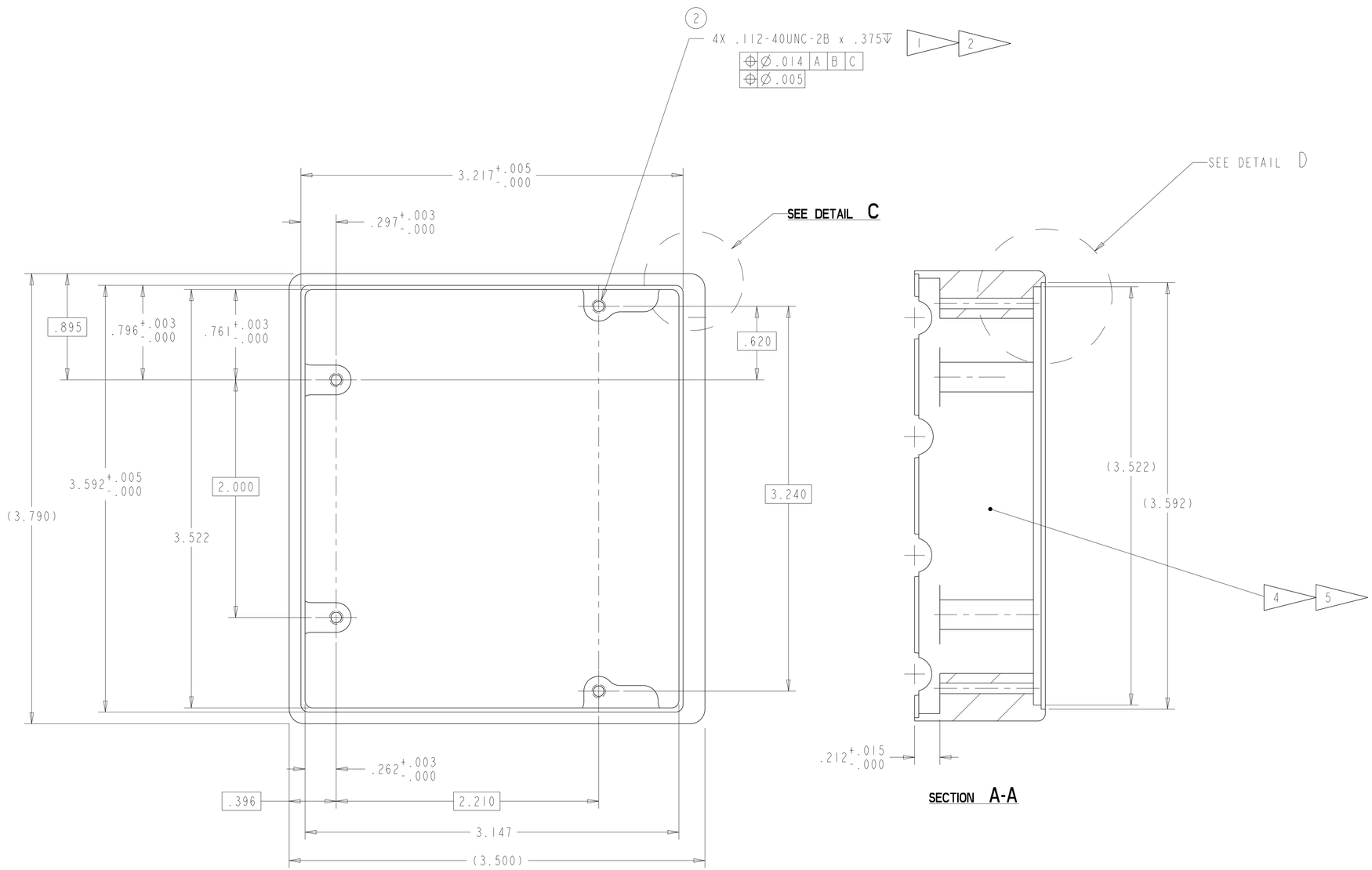

VIEW B-B

SECTION A-A

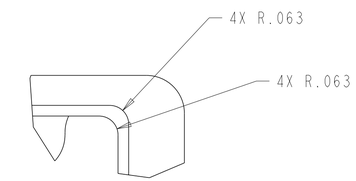

DETAIL C
SCALE 4:1

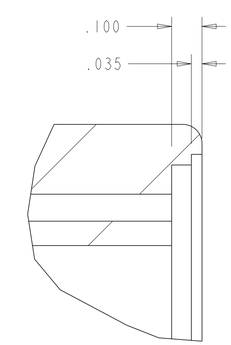

DETAIL D
SCALE 4:1

SIZE	CODE ID NO	DWG NO	REV
D	21356	SEG46118332	TST
SCALE 1:1	ORG EA5	SHEET 2 OF 3	

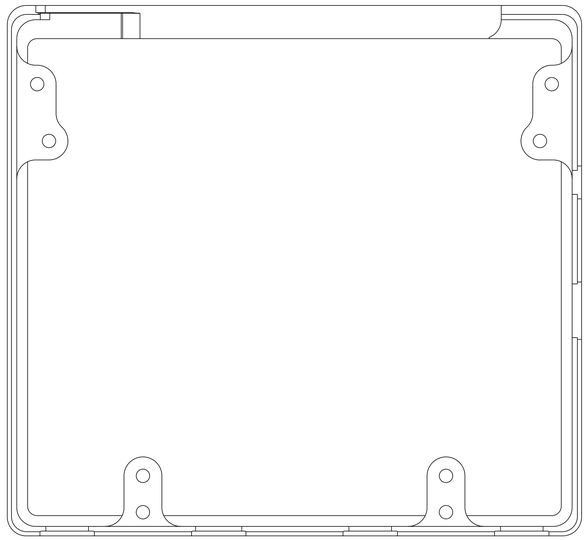

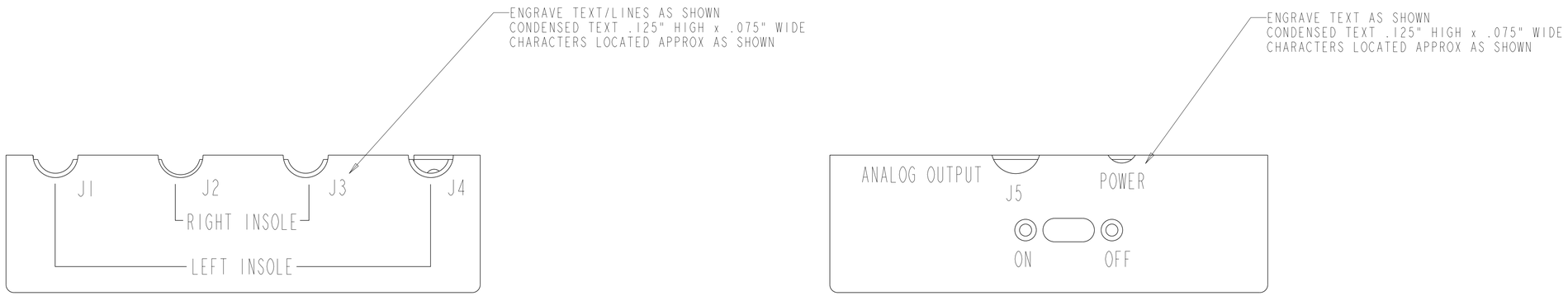

SCALE 2:1

-001
ENGRAVING DETAIL

SIZE	CODE ID NO	DWG NO	REV
D	21356	SEG46118332	TST
SCALE 1:1	ORG EA5	SHEET 3 OF 3	