REV	ZONE	DESCRIPTION OF CHANGE

5 RUBBER STAMP OR STENCIL "LEFT" OR "RIGHT" USING BLACK INK IN .12 HIGH HELVETICA CHARACTERS PER NASA/JSC PRC-9002. LOCATE APPROX. AS SHOWN.

4 RUBBER STAMP OR STENCIL "TOP" ON THE TOP SURFACE OF INSOLE USING CONTRASTING INK COLOR IN .50 HIGH HELVETICA CHARACTERS PER NASA/JSC PRC-9002. LOCATE APPROX. AS SHOWN.

3 MARK PART WITH CREW MEMBERS NAME USING PERMANENT INK MARKER, USING CONTRASTING INK COLOR IN APPROX .25 HIGH CHARACTERS PER NASA/JSC PRC-9002. LOCATE APPROX AS SHOWN.

2 INSOLES ARE MANUFACTURED BY NOVEL GmBH, MUNICH, GERMANY.

1 RUBBER STAMP OR STENCIL PART NUMBER OR AND SERIAL NUMBER USING CONTRASTING INK COLOR IN .12 HIGH HELVETICA CHARACTERS PER NASA/JSC PRC-9002.

FLAG NOTES:

5. BREAK ALL SHARP EDGES AND ROUND ALL CORNERS TO .02 - .04 R.
4. ALL DIMENSIONS ARE IN INCHES/POUNDS.
3. CLEAN PER NASA/JSC PRC-5001 TO LEVEL GC.
2. FABRICATION TOLERANCES AND PRACTICES PER SKZ-36103755.
1. INTERPRET PER JPG 8500.4.

NOTES: UNLESS OTHERWISE SPECIFIED

-303	-302	-301	PART NUMBER	DESCRIPTION	MATERIAL	SPECIFICATION	ITEM
							10
							9
							8
							7
2	2		101.1278	CAP, DUST	FISCHER CONNECTORS ATLANTA, GEORGIA		6
AR	AR		RTV630	RTV, SILICONE	GE SILICONES	#	5
	1		SIG46118262-302	ASSY, PCB/34 PIN CONN. RIGHT FOOT			4
1			SIG46118262-301	ASSY, PCB/34 PIN CONN. LEFT FOOT			3
1				INSOLE, LEFT			2
	1			INSOLE, RIGHT			1
X		1		ASSY, LEFT INSOLE			
	X	1		ASSY, RIGHT INSOLE			
		X					

DIMENSIONAL TOLERANCE UNLESS NOTED OTHERWISE
.0 ± 0.1 .000 ± 0.005
.00 ± 0.02 .0000 ± 0.0005
SURFACE FINISH IN MICROINCHES RMS UNLESS NOTED OTHERWISE 125√
FRACTURE CRITICAL ☐ YES ☒ NO
NEXT ASSY TBD
DWG FILENAME SEG46118241.DWG
☒ FLT HDWR ☐ AERO/ASTRO
☐ OTHER (SPECIFY)

SIGNATURES		DATE
DR	PC NEWLIN	20-Dec-00
ENG	99/99/99 TBD	
CH	99/99/99	
APP		
QE	99/99/99	
MATL	99/99/99	
STRESS		
AUTH	99/99/99	
	99/99/99	

T. APPROVER
T. QE
T. MATERIALS
T. STRESS
T. AUTHORIZER
TEST APP

NATIONAL AERONAUTICS AND SPACE ADMINISTRATION
LYNDON B. JOHNSON SPACE CENTER HOUSTON, TEXAS
ASSEMBLY, INSOLE
TOTAL FORCE FOOT GROUND INTERFACE
PROJECT TBD
SIZE C CODE IDENT NO 21356 DWG NO SEG46118241 REV
SCALE 1:1 ORG EA5 SHEET 1 OF 3

STATUS: Check for DCNs against the drawing.

TST

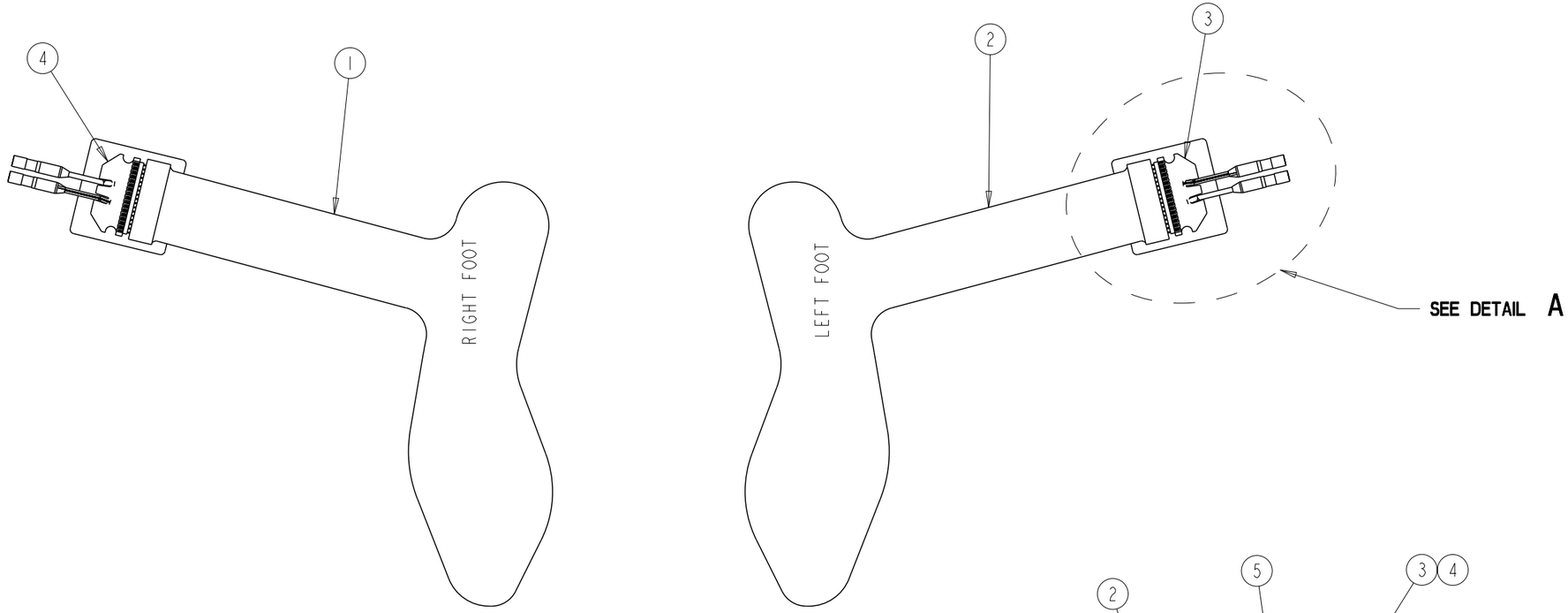

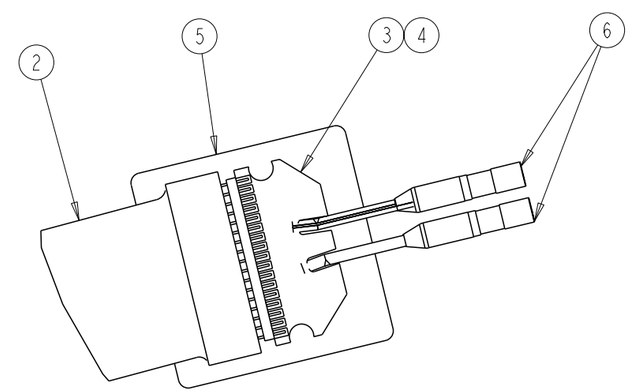

DETAIL A
SCALE 1:1

SIZE	CODE ID NO	DWG NO	REV
C	21356	SEG46118241	
SCALE 1:1	ORG EA5	SHEET 2 OF 3	

TST

NOVEL/PEDAR INSOLE SIZE SCHEDULE

SEG33110422-XXX	PEDAR INSOLES	GERMAN	US MEN	US WOMEN	US CHILDREN	ADDITIONAL
-001 & -002	P	26/27			8-1/2 10	
-003 & -004	Q	28/29			10-1/2 11-1/2	
-005 & -006	R	30/31			12 13	
-007 & -008	S	32/33			1 1-1/2	
-009 & -010	T	34/35			2 3	
-011 & -012	U	36/37		5-1/2 6-1/2	3-1/2 5	W
-013 & -014	V	38/39	6-7	7 8-1/2	5-1/2 6	W/E/S/D
-015 & -016	W	40/41	7-1/2 8-1/2	9 9-1/2		W/E/S
-017 & -018	X	42/43	9-10	10 11		W/E/S/D
-019 & -020	Y	44/45	10-1/2 11			W/E/S
-021 & -022	Z	46/47	11-1/2 12-1/2			W
						W=WIDE E=EXTRAWIDE S=LONG CONN. D=DORSAL PAD

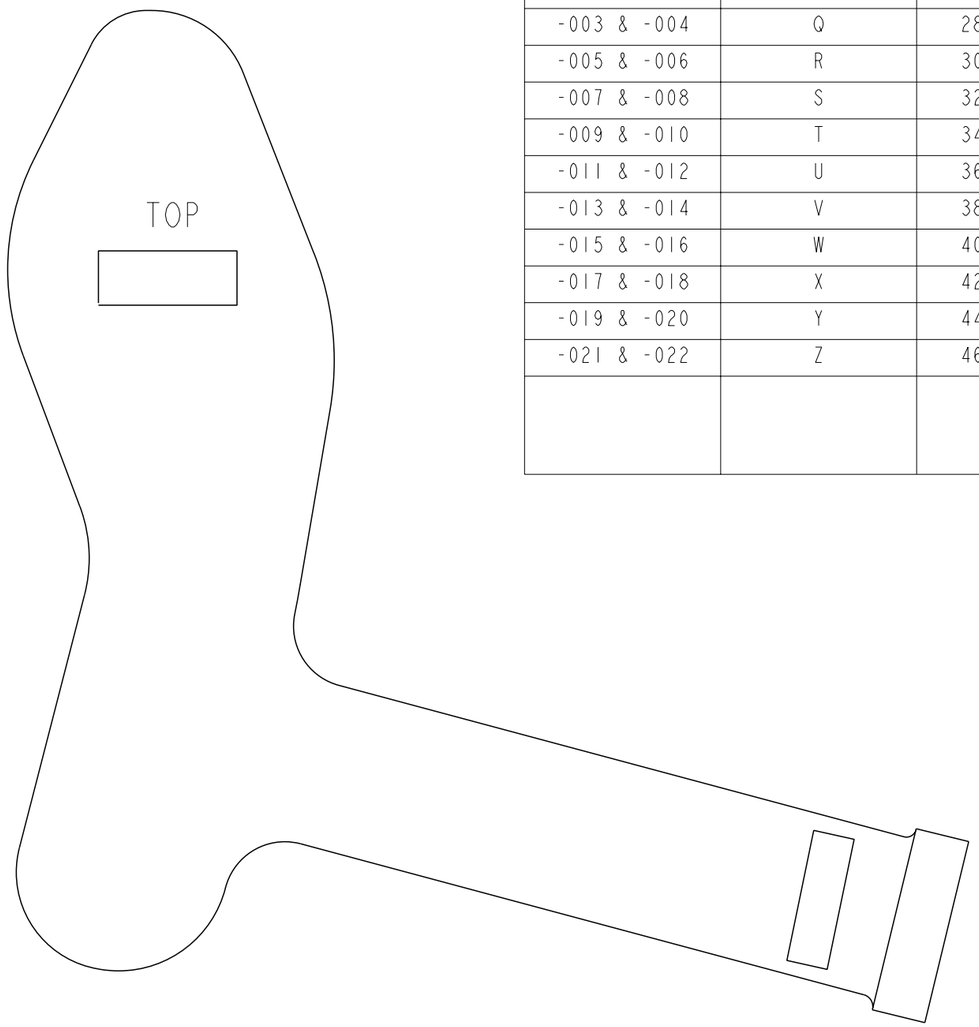

SCALE 1:1

SIZE	CODE ID NO	DWG NO	REV
C	21356	SEG46118241	
SCALE 1:1	ORG EA5	SHEET 3 OF 3	

TST