REV	ZONE	DESCRIPTION OF CHANGE

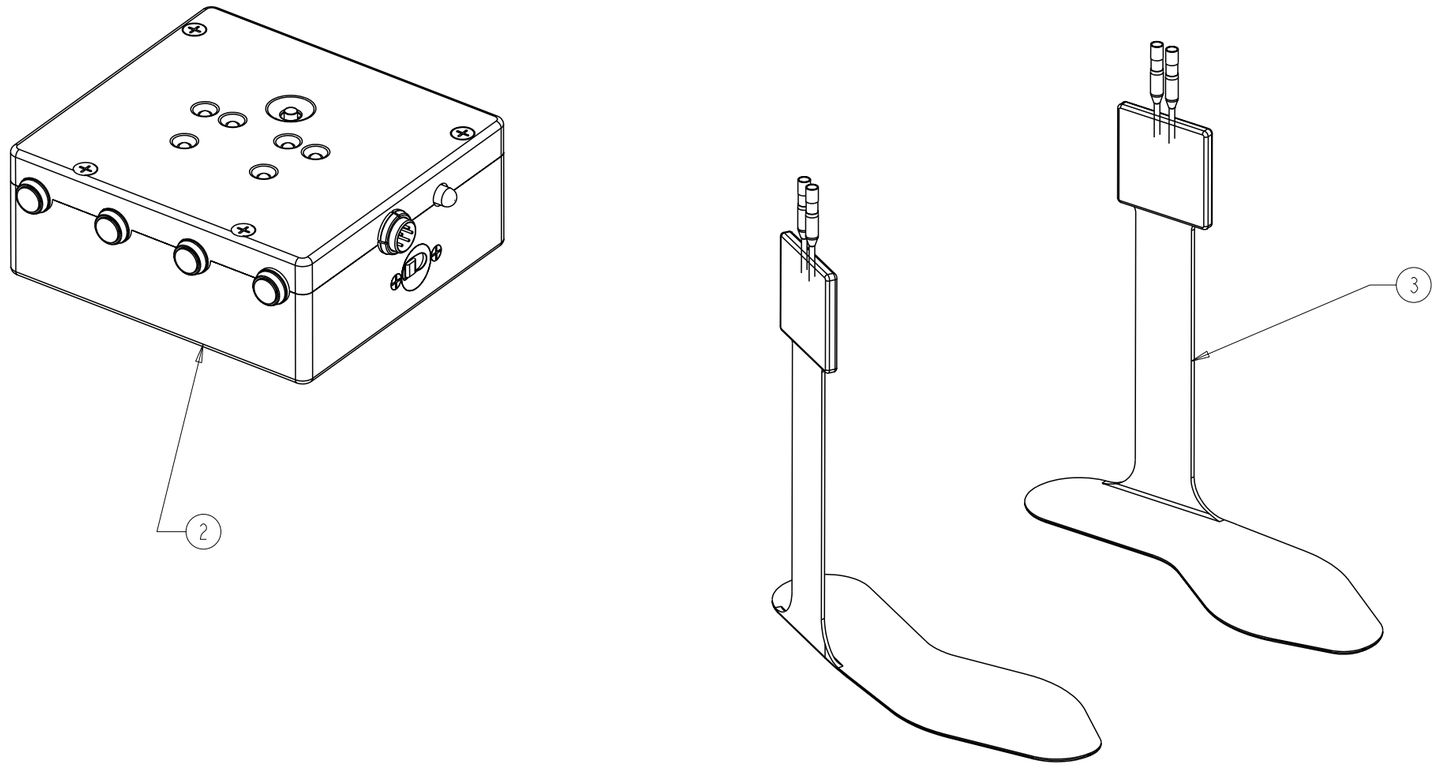

1 INSOLE SIZES TO BE DETRMINED BY CREW SELECTION.

FLAG NOTES

5. BREAK ALL SHARP EDGES AND ROUND ALL CORNERS TO .02 - .04 R.

4. ALL DIMENSIONS ARE IN INCHES/POUNDS.

3. CLEAN PER NASA/JSC PRC-5001 TO LEVEL GC.

2. FABRICATION TOLERANCES AND PRACTICES PER SKZ-36103755.

1. INTERPRET PER JPG 8500.4.

NOTES: UNLESS OTHERWISE SPECIFIED

QTY	PART NUMBER	DESCRIPTION	MATERIAL	SPECIFICATION	ITEM
1	SEG46118241-301	Insole Assembly, Novel			3
1	SEG46118240-301	TF-FGI Box Assembly			2
X	-301				1

DIMENSIONAL TOLERANCE UNLESS NOTED OTHERWISE
.0 ± 0.1 .000 ± 0.005
.00 ± 0.02 .0000 ± 0.0005

SURFACE FINISH IN MICROINCHES RMS UNLESS NOTED OTHERWISE TBD √

FRACTURE CRITICAL ☐ YES ☐ NO

NEXT ASSY TBD

DWG FILENAME SEG46118238.DWG

☐ FLT HDWR ☐ OTHER (SPECIFY)

SIGNATURES		DATE
DR	PC NEWLIN	20-Dec-00
ENG	99/99/99	
CH	99/99/99	
APP		
QE	99/99/99	
MATL	99/99/99	
STRESS		
AUTH	99/99/99	
	99/99/99	

T. APPROVER
QE
T. MATERIALS
STRESS
T. AUTHORIZER
TEST APP

NATIONAL AERONAUTICS AND SPACE ADMINISTRATION

LYNDON B. JOHNSON SPACE CENTER HOUSTON, TEXAS

PRELIMINARY

ASSEMBLY,
TOTAL FORCE FOOT GROUND INTERFACE

PROJECT

SIZE	CODE I D NO	DWG NO	REV
C	21356	SEG46118238	

SCALE 1:1 ORG TBD SHEET 1 OF 1

STATUS: Check for DCNs against the drawing.

TST