REV	ZONE	DESCRIPTION OF CHANGE

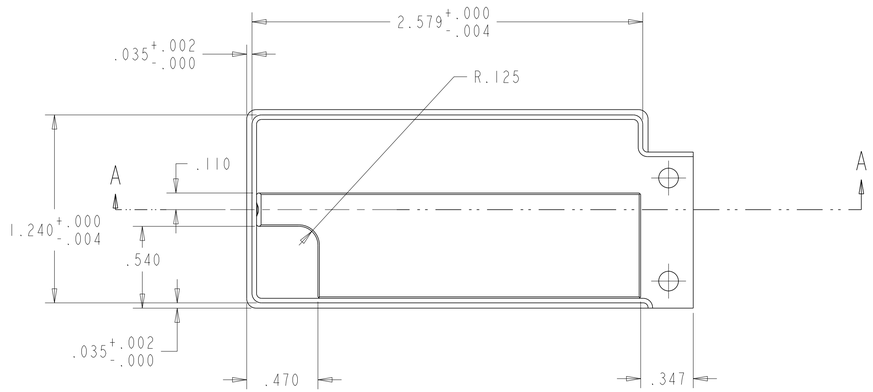

SCALE 2:1

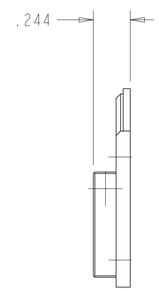

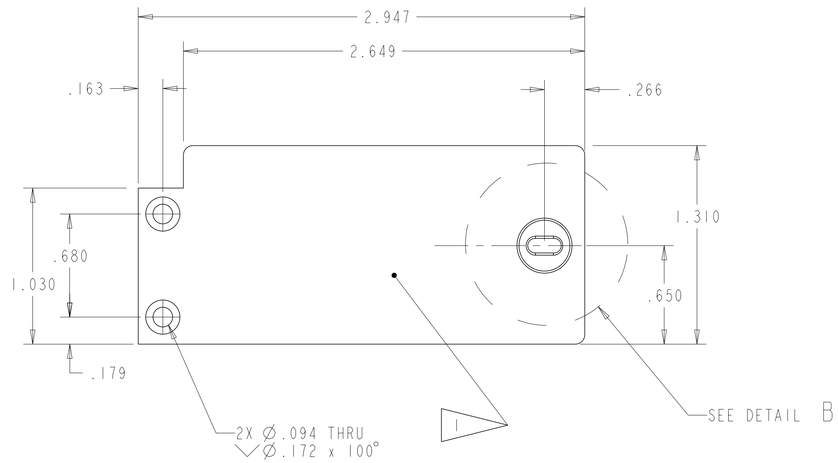

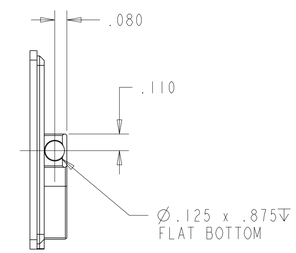

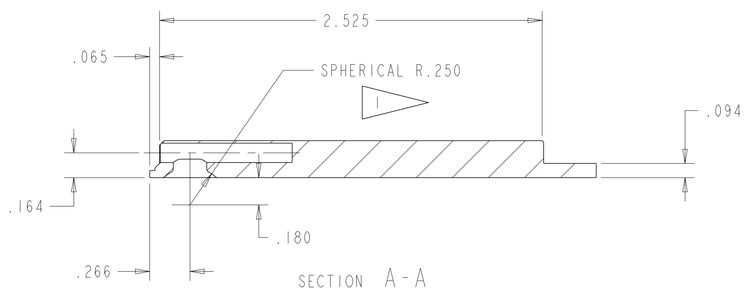

SECTION A-A

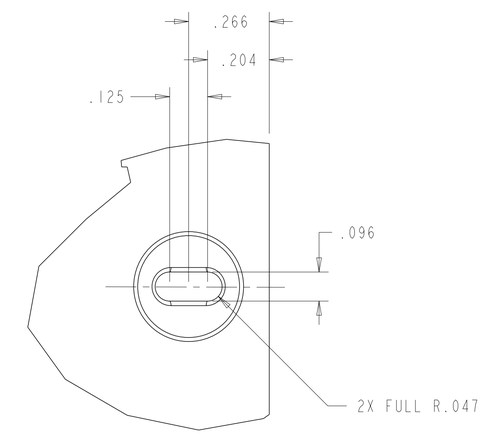

DETAIL B
SCALE 4:1

-001 2 3

3 MASK ALL SURFACES NOT TO BE ANODIZED.

2 CHEMICAL FILM ALL SURFACES NOT TO BE ANODIZED.

1 ANODIZE PER NASA/JSC PRC-5006, TYPE II, CLASS 2, DYED: TURQUOISE REF FED-STD-595, COLOR SPECIFICATION #15187.

FLAG NOTES

6. BAG AND TAG TO IDENTIFY PART NUMBER PER NASA/JSC PRC-9002.
5. CLEAN ALL SURFACES TO LEVEL GC PER NASA/JSC PRC-5001.
4. BREAK ALL SHARP EDGES .010-.020 & ROUND ALL CORNERS TO .02-.04.
3. ALL DIMENSIONS ARE IN INCHES.
2. FABRICATION TOLERANCES AND PRACTICES PER DWG SKZ36103755.
1. INTERPRET DRAWING PER JPG 8500.4, ENGINEERING DRAWING SYSTEM MANUAL.

NOTES: UNLESS OTHERWISE SPECIFIED

QTY	PART NUMBER	DESCRIPTION	MATERIAL	SPECIFICATION	ITEM
1	-001	DOOR	AL ALY 6061-T651 2.947 x 1.310 x .244	QQ-A-250/11	1

DIMENSIONAL TOLERANCE UNLESS NOTED OTHERWISE
.0 ± .1 .000 ± .005
.00 ± .02 ANGULAR ± .5°

SURFACE FINISH IN MICROINCHES RMS UNLESS NOTED OTHERWISE 125

FRACTURE CRITICAL ☐ YES ☒ NO

NEXT ASSY SEG46118240

DWG FILENAME SDG46118335.DRW

☒ FLT HDWR ☐ APPLICABLE GSE
☐ OTHER (SPECIFY) _____

SIGNATURES		DATE
DR	PC NEWLIN	22-Dec-00
ENG	PC NEWLIN	22-Dec-00
CH		
APP	T. APPROVER	99/99/99
QE	T. QE	99/99/99
MATL	T. MATERIALS	99/99/99
STRESS	T. STRESS	99/99/99
AUTH	T. AUTHORIZER	99/99/99
	TEST APP	99/99/99

NATIONAL AERONAUTICS AND SPACE ADMINISTRATION
LYNDON B. JOHNSON SPACE CENTER HOUSTON, TEXAS

DOOR, BATTERY/CONNECTOR ACCESS
TF-FGI BOX

PROJECT

SIZE	CODE-IDENT NO.	DWG NO	REV
D	21356	SDG46118335	TST
SCALE 1:1	ORG EA5	SHEET 1 OF 1	

STATUS: Check for DCNs against the drawing.