REV	ZONE	DESCRIPTION OF CHANGE

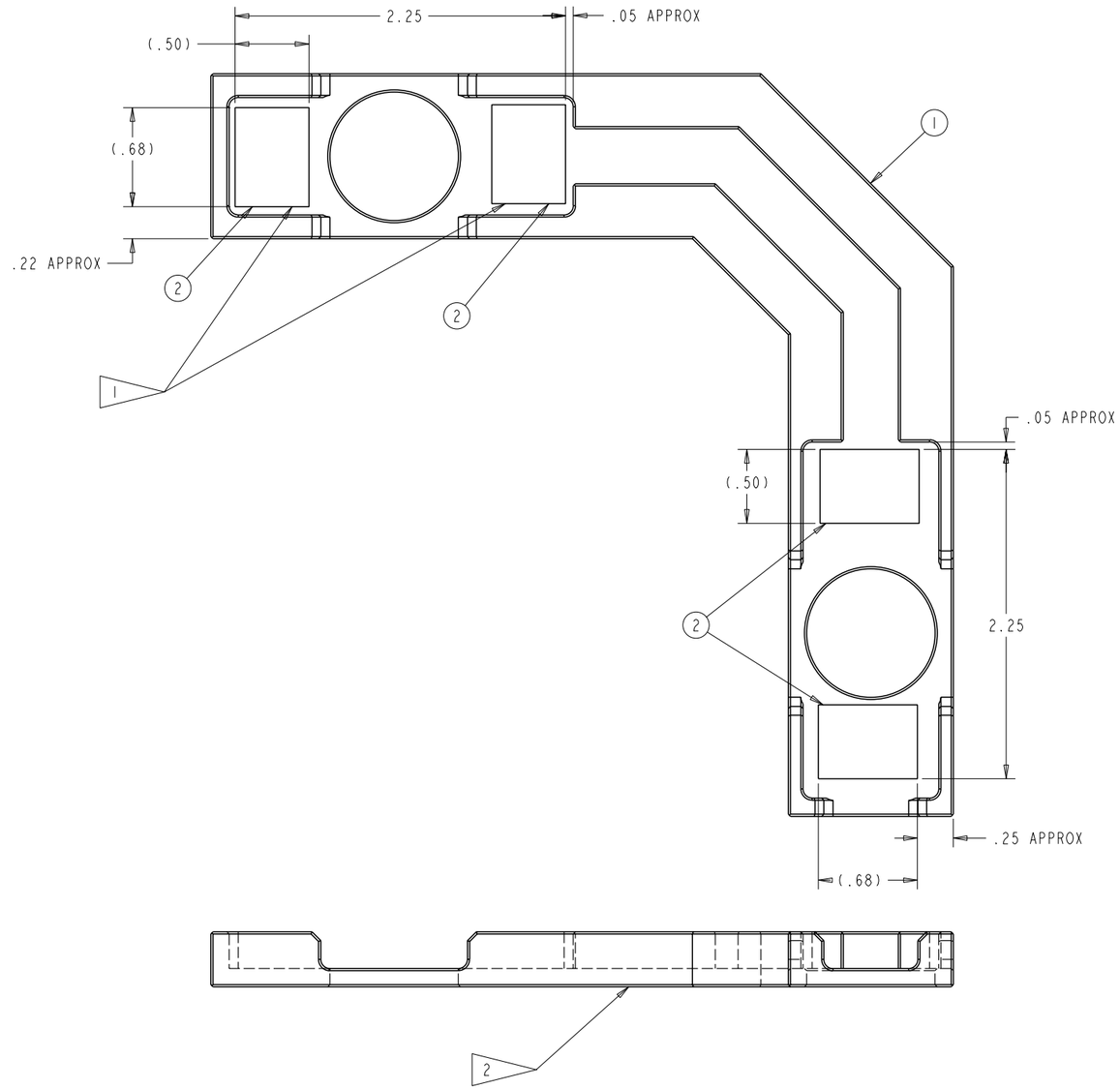

5. BREAK ALL SHARP EDGES BY .010 -.020 AND ROUND ALL CORNERS TO .02 - .04 R.

4. ALL DIMENSIONS ARE IN INCHES.

3. CLEAN TO LEVEL GC PER NASA/JSC PRC-5001.

2. FABRICATION TOLERANCES AND PRACTICES PER SKZ36103755.

1. INTERPRET PER JPG 8500, ENGINEERING DRAWING SYSTEM MANUAL.

NOTES: UNLESS OTHERWISE SPECIFIED

2 PART NUMBER SHALL BE MARKED BY RUBBER STAMPING USING 73X BLACK INK PER NASA/JSC PRC-9002. CHARACTER HEIGHT SHALL BE 1/8 INCH HIGH GOTHIC CHARACTERS PER NASA/JSC PRC-9002. LOCATE APPROXIMATELY AS SHOWN

1 ADHESIVELY BOND PER PER NASA/JSC PRC-1001A, LEVEL 1.

FLAG NOTES

QTY	PART NUMBER	DESCRIPTION	MATERIAL	SPECIFICATION	ITEM
AR	73X	INK, MARKING BLACK		INDEPENDENT INK, GARDENIA, CA	3
4	174792	VELCRO, LOOP 1000	.50 X .67	1	2
1	SDG46118330-001	JES CALIBRATION TEMPLATE			1
X	-301	JES CALIBRATION TEMPLATE ASSEMBLY			

T. APPROVER	99/99/99
T. QE	99/99/99
T. MATERIALS	99/99/99
T. STRESS	99/99/99
T. AUTHORIZER	99/99/99
TEST APP	99/99/99

STATUS: Check for DCNs against the drawing.

DIMENSIONAL TOLERANCE UNLESS NOTED OTHERWISE
.0 ± .005 .000 ± .005
.00 ± .02 ANGULAR ± .5°

SURFACE FINISH IN MICROINCHES RMS UNLESS NOTED OTHERWISE ✓

FRACTURE CRITICAL ASSY
☐ YES
☒ NO

DWG FILENAME SEG46118331.DRW

☐ FLT HDWR ☐ APPLICABLE GSE
☐ OTHER (SPECIFY)

SIGNATURES		DATE
DR	J.MYRICK	31-Jan-01
ENG	G.DALRYMPLE	31-Jan-01
CH		
APP		
QE		
MATL		
STRESS		
AUTH		

NATIONAL AERONAUTICS AND SPACE ADMINISTRATION
LYNDON B. JOHNSON SPACE CENTER HOUSTON, TEXAS

JES CALIBRATION TEMPLATE-ANKLE ASSEMBLY DETAILS

PROJECT HRF TST

SIZE	CODE IDENT NO	DWG NO	REV
D	21356	SEG46118331	

SCALE 1:1 ORG EA5 SHEET 1 OF 1

PRELIMINARY