REV	ZONE	DESCRIPTION OF CHANGE

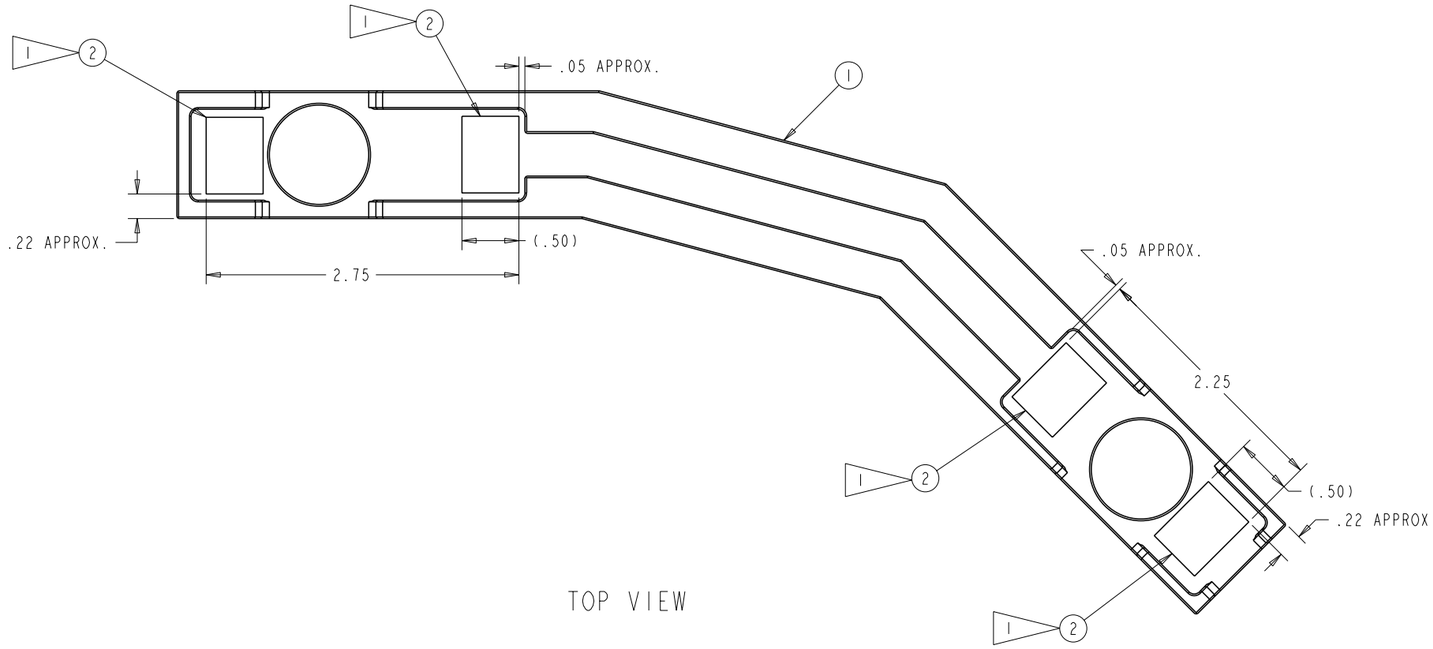

TOP VIEW

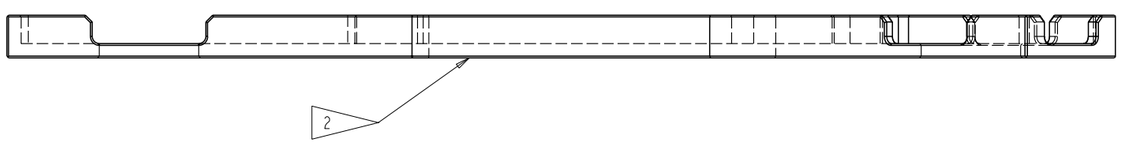

-301

5. BREAK ALL SHARP EDGES BY .010 -.020 AND ROUND ALL CORNERS TO .02 - .04 R.

4. ALL DIMENSIONS ARE IN INCHES.

3. CLEAN TO LEVEL GC PER NASA/JSC PRC-5001.

2. FABRICATION TOLERANCES AND PRACTICES PER SKZ36103755.

1. INTERPRET PER JPG 8500, ENGINEERING DRAWING SYSTEM MANUAL.

NOTES: UNLESS OTHERWISE SPECIFIED

2 PART NUMBER SHALL BE MARKED BY RUBBER STAMPING USING 73X BLACK INK PER NASA/JSC PRC-9002. CHARACTER HEIGHT SHALL BE 1/8 INCH HIGH GOTHIC CHARACTERS PER NASA/JSC PRC-9002. LOCATE APPROXIMATELY AS SHOWN

1 ADHESIVELY BOND PER PER NASA/JSC PRC-1001A, LEVEL 1.

FLAG NOTES

QTY	PART NUMBER	DESCRIPTION	MATERIAL	SPECIFICATION	ITEM
AR	73X	INK, MARKING BLACK		INDEPENDENT INK, GARDENIA, CA	3
4	174792	VELCRO, LOOP 1000	.50 X .67	1	2
1	SDG46118330-001	JES CALIBRATION TEMPLATE			1
X	-301	JES CALIBRATION TEMPLATE ASSEMBLY			

T. APPROVER	99/99/99
T. QE	99/99/99
T. MATERIALS	99/99/99
T. STRESS	99/99/99
T. AUTHORIZER	99/99/99
TEST APP	99/99/99

STATUS: Check for DCNs against the drawing.

DIMENSIONAL TOLERANCE UNLESS NOTED OTHERWISE
.0 ± .005 .000 ± .005
.00 ± .02 ANGULAR ± .5°

SURFACE FINISH IN MICROINCHES RMS UNLESS NOTED OTHERWISE 125√

FRACTURE CRITICAL ASSY
[ ] YES
[X] NO
[X] FLT HDWR [ ] APPLICABLE GSE
[ ] OTHER (SPECIFY)

DWG FILENAME SEG46118329.DRW

SIGNATURES		DATE
DR	J.MYRICK	31-Jan-01
ENG	G.DALRYMPLE	31-Jan-01
CH		
APP		
QE		
MATL		
STRESS		
AUTH		

NATIONAL AERONAUTICS AND SPACE ADMINISTRATION
LYNDON B. JOHNSON SPACE CENTER HOUSTON, TEXAS

JES CALIBRATION TEMPLATE ASSEMBLY DETAILS

PROJECT HRF TST

SIZE	CODE IDENT NO	DWG NO	REV
D	21356	SEG46118329	

SCALE 1:1 ORG EA5 SHEET 1 OF 1

PRELIMINARY