REV	ZONE	DESCRIPTION OF CHANGE

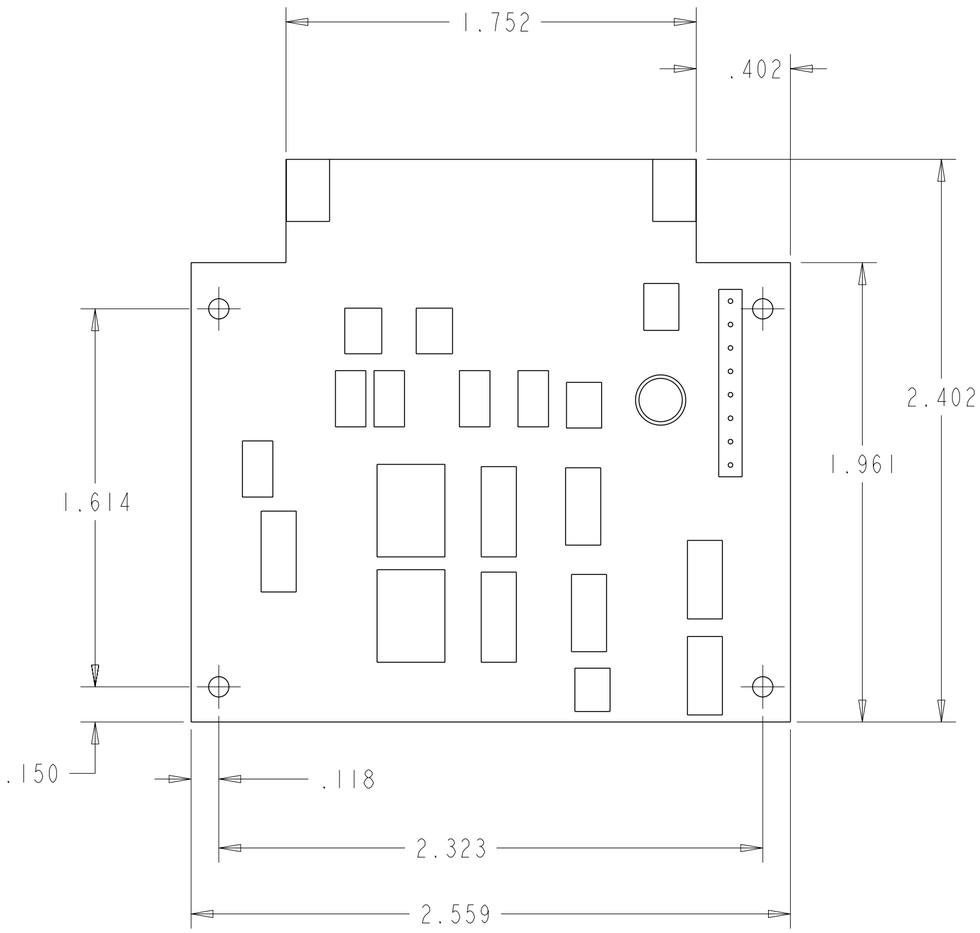

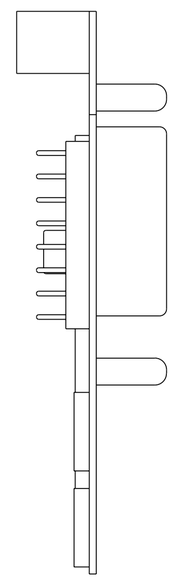

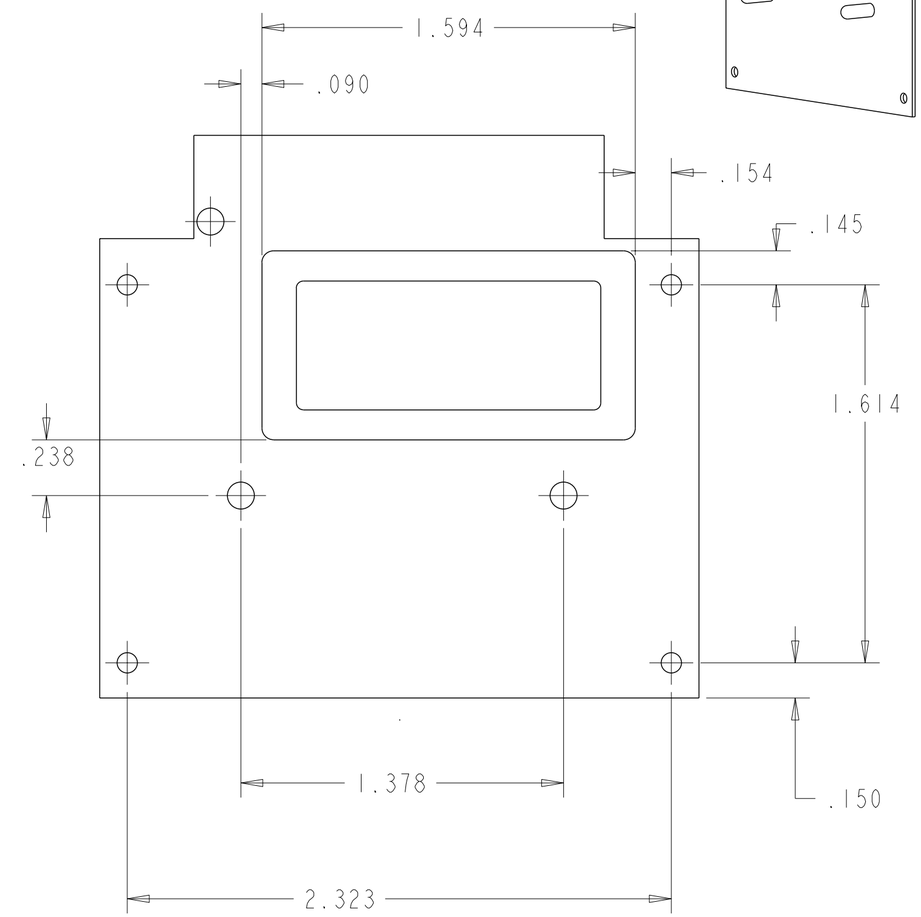

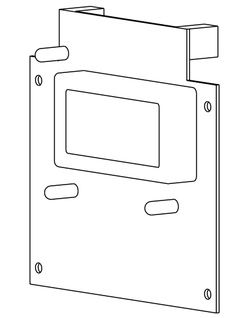

4. THIS ASSEMBLY DOES NOT CONTAIN FRACTURE CRITICAL PARTS.
3. ALL DIMENSIONS ARE IN INCHES.
2. FABRICATION TOLERANCES & PRACTICES PER DWG SKZ36103755D.
1. INTERPRET DRAWING PER JPG 8500.4D, ENGINEERING DRAWING SYSTEM MANUAL.

NOTES: UNLESS OTHERWISE SPECIFIED

	-801	CIRCUIT BOARD W/LCD FOR JOINT EXCURSION ENCLOSURE SYSTEM			
-801	PART NUMBER	DESCRIPTION	MATERIAL	SPECIFICATION	ITEM

DIMENSIONAL TOLERANCE UNLESS NOTED OTHERWISE
.0 ± 0.1 .000 ± 0.005
.00 ± 0.02 ANGULAR ± 0.5°

SURFACE FINISH IN MICROINCHES RMS UNLESS NOTED OTHERWISE TBD

FRACTURE CRITICAL ☐ YES ☐ NO

NEXT ASSY TBD

DWG FILENAME SEG46118317.DRW

☐ FLT HDWR ☐ APPLICABLE GSE
☐ OTHER (SPECIFY) _____

SIGNATURES		DATE
DR	P. VAN GOEY	10-Jan-01
ENG	G.DALRYMPLE	
CH		
APP	T. APPROVER	99/99/99
QE	T. QE	99/99/99
MATL	T. MATERIALS	99/99/99
STRESS	T. STRESS	99/99/99
AUTH	T. AUTHORIZER	99/99/99
	TEST APP	99/99/99

NATIONAL AERONAUTICS AND SPACE ADMINISTRATION

LYNDON B. JOHNSON SPACE CENTER HOUSTON, TEXAS

PRELIMINARY

CIRCUIT BOARD W/LCD FOR JOINT EXCURSION ENCLOSURE SYSTEM

PROJECT HRF/JES

SIZE	CODE ID NO	DWG NO	REV
C	21356	SEG46118317	TST

SCALE 2/1 ORG EA5 SHEET 1 OF 1

STATUS: Check for DCNs against the drawing.