REV	ZONE	DESCRIPTION OF CHANGE

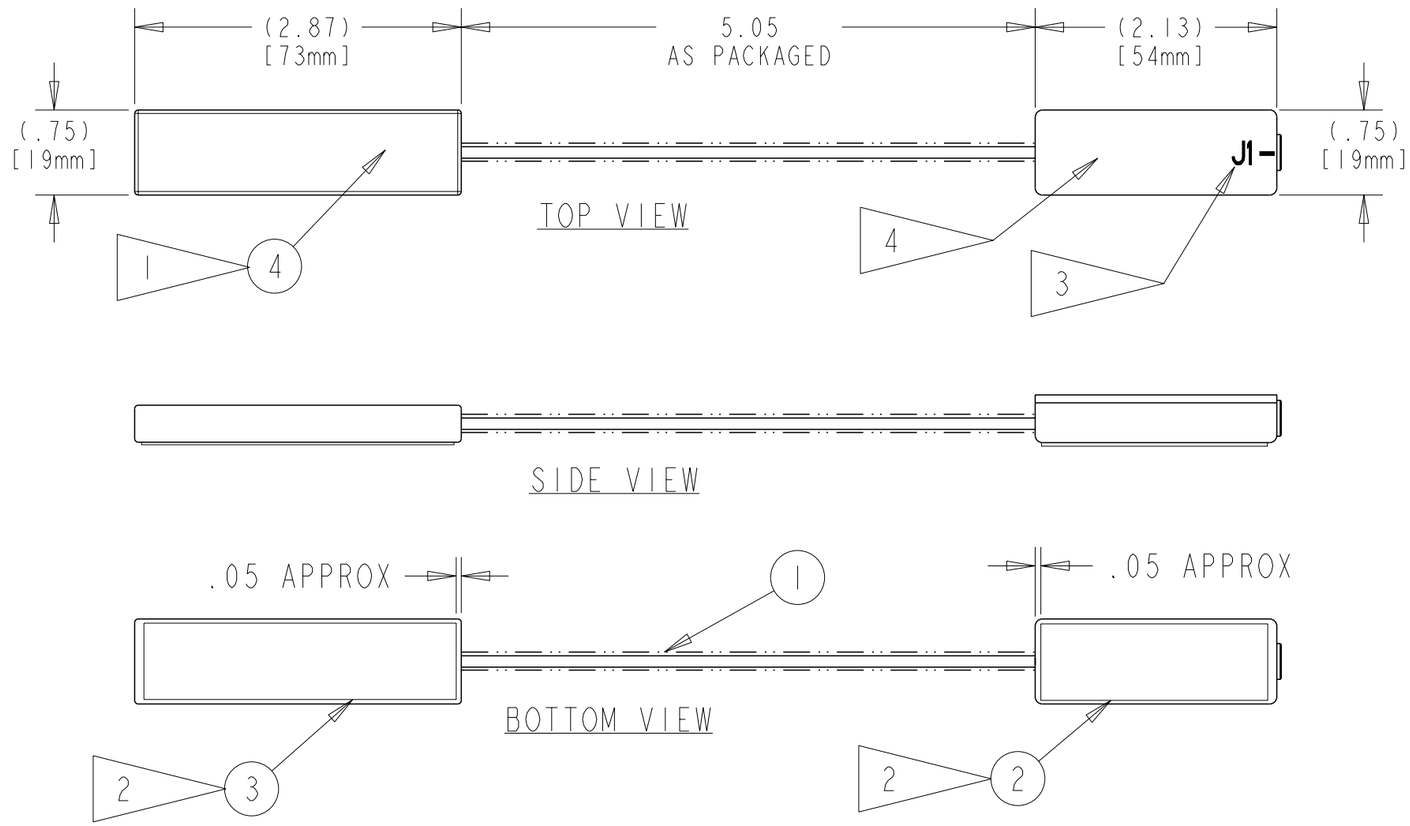

-302

4 PART NUMBER SHALL BE MARKED BY RUBBER STAMPING USING 73X BLACK INK PER NASA/JSC PRC-9002. CHARACTER HEIGHT SHALL BE 1/8 INCH HIGH GOTHIC. LOCATE APPROXIMATELY AS SHOWN

3 TERMINAL NUMBERS SHALL BE MARKED BY RUBBER STAMPING IN 1/8 HIGH GOTHIC CHARACTERS PER NASA/JSC PRC-9002. LOCATE EXACTLY AS SHOWN

2 ADHESIVELY BOND PER NASA/JSC PRC-1001A, LEVEL 1 LOCATE ON BOTTOM SIDE

1 APPLY MARKING DECAL PER NASA/JSC PRC-9002.

FLAG NOTES

QTY	PART NUMBER	DESCRIPTION	MATERIAL	SPECIFICATION	ITEM
1	TBD	IMS LABEL		1	4
1	174791	VELCRO HOOK88	2.75 X .67	2	3
1	174791	VELCRO HOOK88	2.00 X .67	2	2
1	XM180/N-S	GONIOMETER			1
X	-302				

DIMENSIONAL TOLERANCE UNLESS NOTED OTHERWISE
.0 ± 0.1 .000 ± 0.005
.00 ± 0.02 ANGULAR ± 0.5°

SURFACE FINISH IN MICROINCHES RMS UNLESS NOTED OTHERWISE 125

FRACTURE CRITICAL [ ] YES [X] NO

NEXT ASSY

DWG FILENAME SEG46118315.DRW

[X] FLT HDWR [ ] APPLICABLE GSE
[ ] OTHER (SPECIFY) ___

SIGNATURES		DATE
DR	J.MYRICK	31-Jan-01
ENG	G.DALRYMPLE	31-Jan-01
CH		
APP	T. APPROVER	99/99/99
QE	T. QE	99/99/99
MATL	T. MATERIALS	99/99/99
STRESS	T. STRESS	99/99/99
AUTH	T. AUTHORIZER	99/99/99
	TEST APP	99/99/99

NATIONAL AERONAUTICS AND SPACE ADMINISTRATION

LYNDON B. JOHNSON SPACE CENTER HOUSTON, TEXAS

PRELIMINARY

JES KNEE SENSOR

PROJECT HRF

SIZE	CODE IDENT NO	DWG NO	REV
B	21356	SEG46118315	TST

SCALE 1:1 ORG EA5 SHEET 1 OF 1

STATUS: Check for DCNs against the drawing.