| REV | ZONE | DESCRIPTION OF CHANGE |
|---|---|---|

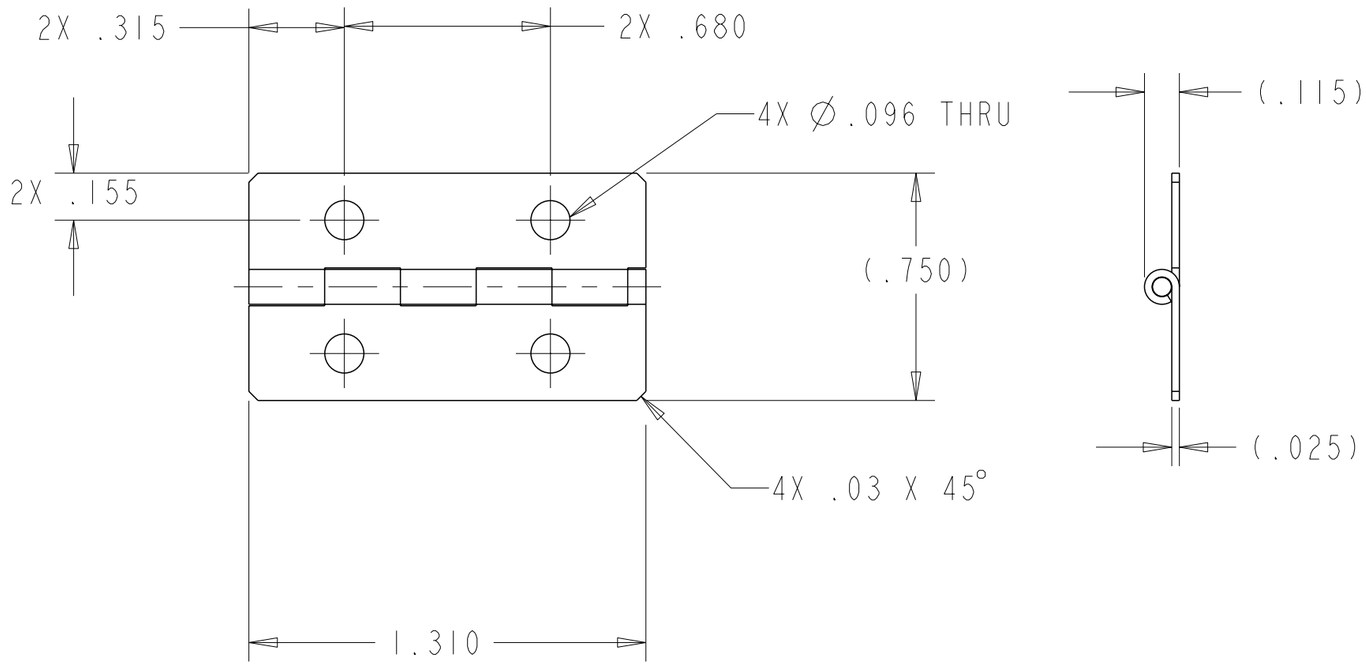


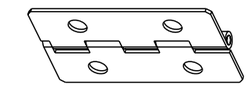

-801

5. ALL REFERENCED SPECIFICATIONS AND STANDARDS SHALL BE OF THE LATEST REVISION LEVEL OR AS SPECIFIED IN THE PROCUREMENT DOCUMENT. IN CASE OF CONFLICT. THE PROCUREMENT DOCUMENT SHALL TAKE PRECEDENCE.
4. THIS ASSEMBLY DOES NOT CONTAIN FRACTURE CRITICAL PARTS.
3. ALL DIMENSIONS ARE IN INCHES.
2. FABRICATION TOLERANCES & PRACTICES PER SKZ36103755D.
1. INTERPERT DRAWING PER JPG 8500.4D, ENGINEERING DRAWING SYSTEM MANUAL.

NOTES: UNLESS OTHERWISE SPECIFIED

| | | | | | |
|---|---|---|---|---|---|
| | -801 | HINGE, PIANO<br>1.31 X .75 X .025 THK. | CRES, BRAUN MANUFACTURING CO.<br>MOUNT PROSPECT, ILL 847-635-2050 | | |
| -801 | PART NUMBER | DESCRIPTION | MATERIAL | SPECIFICATION | ITEM |

DIMENSIONAL TOLERANCE UNLESS NOTED OTHERWISE
.0 ± 0.1 .000 ± 0.005
.00 ± 0.02 ANGULAR ± 0.5°

SURFACE FINISH IN MICROINCHES RMS UNLESS NOTED OTHERWISE 125√

FRACTURE CRITICAL
[ ] YES
[X] NO

NEXT ASSY TBD

DWG FILENAME SEG46117988.DRW

[X] FLT HDWR [ ] APPLICABLE GSE
[ ] OTHER (SPECIFY) _____

| SIGNATURES | | DATE |
|---|---|---|
| DR | P. VAN GOEY | 9-Jan-01 |
| ENG | G. DALRYMPLE | |
| CH | | |
| APP | T. APPROVER | 99/99/99 |
| QE | T. QE | 99/99/99 |
| MATL | T. MATERIALS | 99/99/99 |
| STRESS | T. STRESS | 99/99/99 |
| AUTH | T. AUTHORIZER | 99/99/99 |
| TEST APP | | 99/99/99 |

DRAFT

**NATIONAL AERONAUTICS AND SPACE ADMINISTRATION**

LYNDON B. JOHNSON SPACE CENTER HOUSTON, TEXAS

UNPUBLISHED

HINGE, FOR BATTERY DOOR, JOINT
EXCURSION SYSTEM ENCLOSURE, ASSEMBLY

PROJECT HRS/JES

| SIZE | CODE ID NO | DWG NO | REV |
|---|---|---|---|
| B | 21356 | SEG46117988 | TST |

SCALE 2/1 ORG EA5 SHEET 1 OF 1

STATUS: Check for DCNs against the drawing.