REV	ZONE	DESCRIPTION OF CHANGE

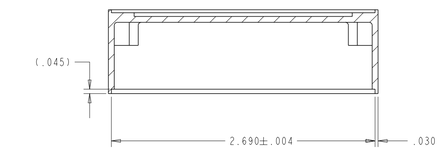

SECTION D-D
SCALE 2/1

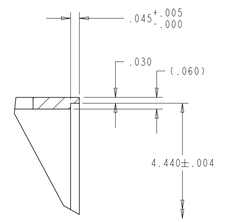

DETAIL C
SCALE 4/1

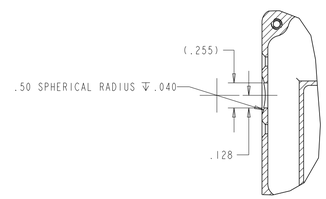

SECTION B-B
SCALE 2/1

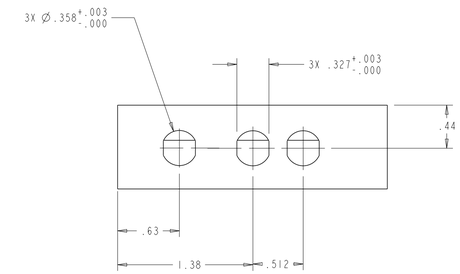

TOP VIEW

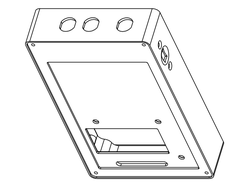

ISO VIEW
REFERENCE ONLY

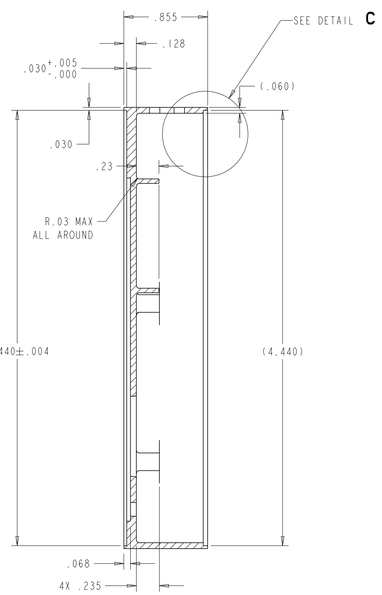

SECTION A-A

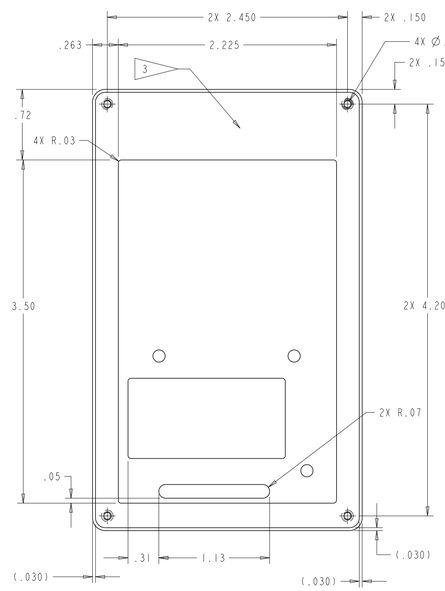

FRONT VIEW
SCALE 2/1

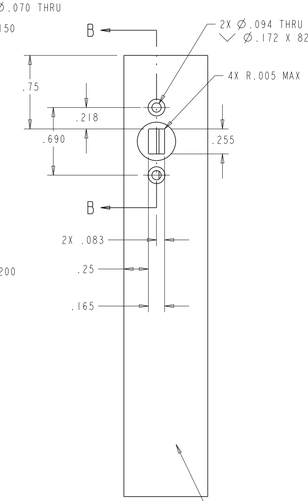

4 SIDES
OUTSIDE ONLY

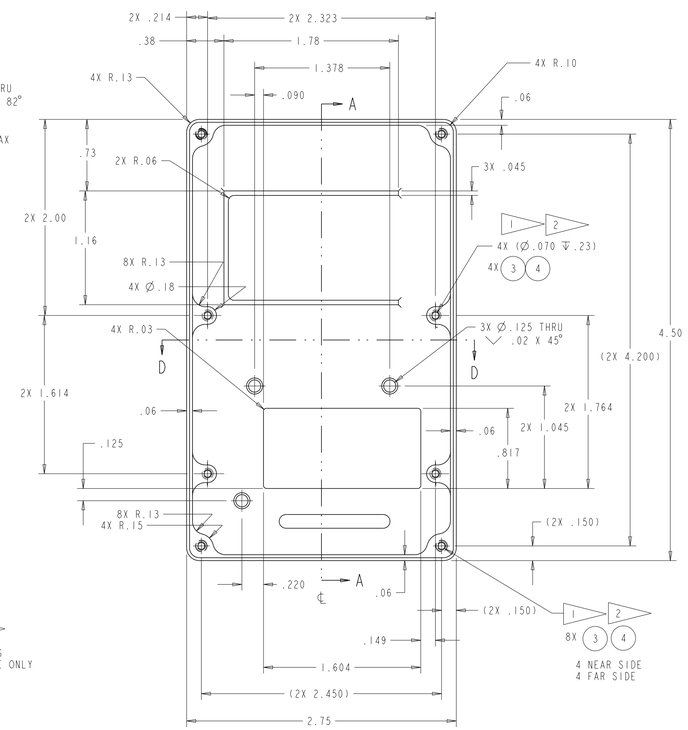

4 NEAR SIDE
4 FAR SIDE

-001 -301 6 5

BACK VIEW
SCALE 2/1

6 MASK ALL SURFACES NOT TO BE ANODIZED.

5 CHEMICAL FILM ALL SURFACES NOT TO BE ANODIZED.

4 ANODIZE PER NASA/JSC PRC-5006, TYPE II, CLASS 2 DYED: TURQUOISE REF FED-STD-595, COLOR SPECIFICATION #15187.

3 RUBBER STAMP OR STENCIL P/N USING INK, ITEM 5 .13 INCH HIGH GOTHIC CHARACTERS PER NASA/JSC PRC-9002, LOCATE APPROXIMATLEY AS SHOWN.

2 MASK INSERTS DURING ANY OPERATIONS THAT MAY INDUCE CONTAMINATES INTO INSERTS.

1 INSTALL INSERTS PER NASA/JSC PRC 9008. SEAL INSERTS WITH SUPER KOROPON PRIMER BASE PER NASA/JSC PRC 4004.

FLAG NOTES:

9. THIS ASSEMBLY DOES NOT CONTAIN FRACTURE CRITICAL PARTS.
8. ANODIZE PER NASA/JSC PRC-5006, TYPE II, CLASS I, PRIOR TO INSTALLATION OF HELICAL THREAD INSERTS.
7. ALL REFERENCED SPECIFICATIONS AND STANDARDS SHALL BE OF THE LATEST REVISION LEVEL OR AS SPECIFIED IN THE PROCUREMENT DOCUMENT. IN CASE OF CONFLICT, THE PROCUREMENT DOCUMENT SHALL TAKE PRECEDENCE.
6. BAG AND TAG TO IDENTIFY PART NUMBER PER NASA/JSC PRC-9002.
5. CLEAN ALL SURFACES TO LEVEL GC PER NASA/JSC PRC-5001.
4. RADIUS ALL EDGES AND CORNERS .04-.06. FILLET RADII .02 MAX.
3. ALL DIMENSIONS ARE IN INCHES.
2. FABRICATION TOLERANCES & PRACTICES PER DWG SKZ36103755.
1. INTERPRET DRAWING PER JPG 8500.4, ENGINEERING DRAWING SYSTEM MANUAL.

NOTES: UNLESS OTHERWISE SPECIFIED

-301	PART NUMBER	DESCRIPTION	MATERIAL	SPECIFICATION	ITEM
AR	73X	INK, BLACK	INDEPENDANT INK CO., GARDENA, CA.		5
AR	515-700	EPOXY BASE PRIMER SUPER KOROPON			4
12	MS21209-C0220	THREAD INSERT, .086-56 UNC X .172 L			3
1	-001	HOUSING, JES	AL ALY, 6061-T651 5.25 X 2.83 X 1.00	QQ-A-250/11	2
	-301	HOUSING, ASSEMBLY			1

SIGNATURES		DATE
DR	J. VAN ONEY	5-Jan-01
APPR		99/99/99
T. QE		99/99/99
T. MATERIALS		99/99/99
T. STRESS		99/99/99
AUTHORIZER		99/99/99
TEST APP		99/99/99

DIMENSIONAL TOLERANCE UNLESS NOTED OTHERWISE .0 ± .1 .000 ± .005 .00 ± .02 ANGULAR ± .5°

SURFACE FINISH IN MICROINCHES RMS UNLESS NOTED OTHERWISE 125

FRACTURE CRITICAL: ☐ YES ☒ NO

NEXT ASSY SEG461179B1-JW

DWG FILENAME SEG461179B4.DRW

☒ FLT HDWR ☐ APPLICABLE GSE ☐ OTHER (SPECIFY)

NATIONAL AERONAUTICS AND SPACE ADMINISTRATION
LYNDON B. JOHNSON SPACE CENTER HOUSTON, TEXAS

HOUSING, JOINT EXCURSION SYSTEM ENCLOSURE, DETAIL/ASSEMBLY

ETAC JES

MATL CTRLS

CODE IDENT NO	DWG NO	REV
E 21356	SEG461179B4	N/C

SCALE 1/1 ORG EA5 SHEET 1 OF 1

STATUS: Check for DCNs against the drawing.

TST