REV	ZONE	DESCRIPTION OF CHANGE

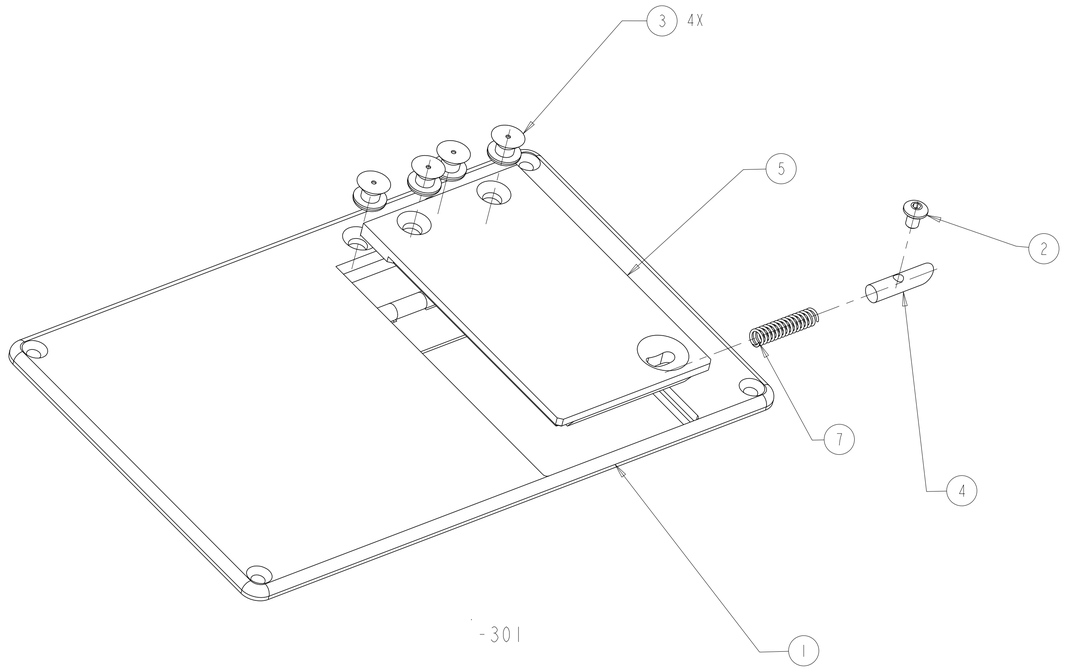

-301

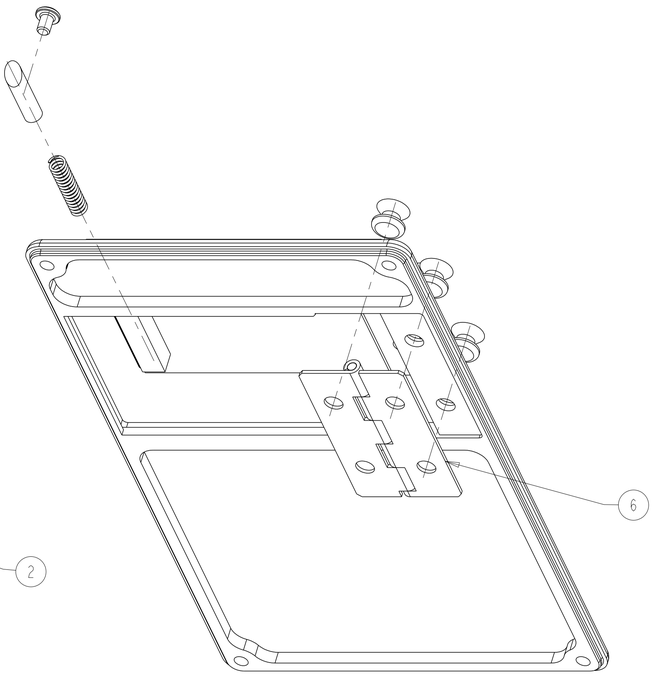

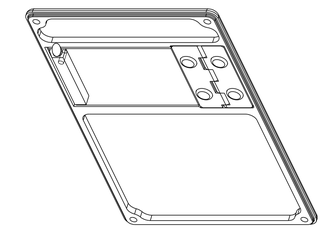

-301 ASSEMBLY

-301	PART NUMBER	DESCRIPTION	MATERIAL	SPECIFICATION	ITEM
1	MS24585-C1	SPRING, COMPRESSION			7
1	SEG46117988-301	HINGE, CONTINIOUS PIANO 3/4 X 1-5/16 X .025 THK.			6
1	SDG46117986-001	DOOR, BATTERY			5
1	SDG46117987-001	LATCH PIN			4
4	MS20601-B4W2	RIVET, BLIND, STRUCTURAL 100° FLUSH HEAD			3
1	MS51957-2	SCREW, MACHINE PAN HEAD 2-56 UNC-2A X .188 LG.			2
1	SDG46117985-001	COVER PLATE, BACK FOR JOINT EXCURSION SYSTEM ENCLOSURE			1
X	-301	BACK COVER ASSEMBLY FOR JOINT EXCURSION SYSTEM ENCLOSURE			

5. ALL REFERENCED SPECIFICATIONS AND STANDARDS SHALL BE OF THE LATEST REVISION LEVEL OR AS SPECIFIED IN THE PROCUREMENT DOCUMENT. IN CASE OF CONFLICT. THE PROCUREMENT DOCUMENT SHALL TAKE PRECEDENCE.
4. THIS ASSEMBLY DOES NOT CONTAIN FRACTURE CRITICAL PARTS.
3. ALL DIMENSIONS ARE IN INCHES.
2. FABRICATION TOLERANCES & PRACTICES PER SKZ36103755D.
1. INTERPERT DRAWING PER JPG 8500.4D, ENGINEERING DRAWING SYSTEM MANUAL.

NOTES: UNLESS OTHERWISE SPECIFIED

DIMENSIONAL TOLERANCE UNLESS NOTED OTHERWISE
.0 ± .1 .000 ± .005
.00 ± .02 ANGULAR ± .5°

SURFACE FINISH IN MICROINCHES RMS UNLESS NOTED OTHERWISE N/A

FRACTURE CRITICAL
☐ YES
☒ NO

NEXT ASSY SEG46117981

DWG FILENAME SEG46117982.DRW

☒ FLT HDWR ☐ APPLICABLE GSE
☐ OTHER (SPECIFY) _____

SIGNATURES		DATE
DR	P. VAN GOEY	06-JAN-01
ENG	G. DALRYMPLE	
CH		
APP	T. APPROVER	99/99/99
QE	T. QE	99/99/99
MATL	T. MATERIALS	99/99/99
STRESS	T. STRESS	99/99/99
AUTH	T. AUTHORIZER	99/99/99
	TEST APP	99/99/99

NATIONAL AERONAUTICS AND SPACE ADMINISTRATION
LYNDON B. JOHNSON SPACE CENTER HOUSTON, TEXAS

BACK COVER ASSEMBLY, FOR JES
(JOIN EXCURESION SYSTEM ENCLOSURE)

PROJECT ETAC JES

SIZE	CODE ID NO	DWG NO	REV
D	21356	SEG46117982	TST
SCALE 2/1	ORG EA5	SHEET 1 OF 1	

STATUS: Check for DCNs against the drawing.