REV	ZONE	DESCRIPTION OF CHANGE

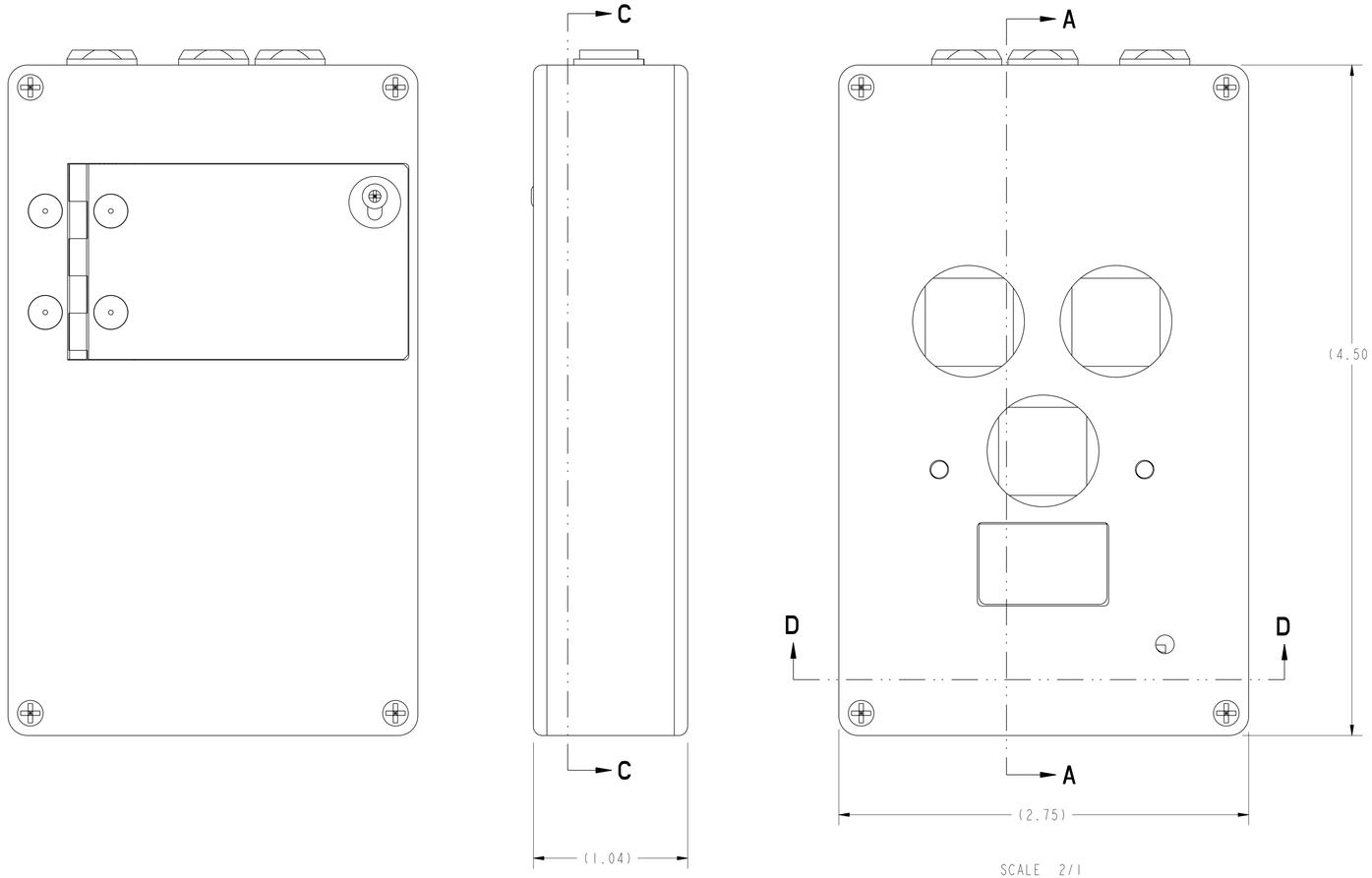

SCALE 2/1

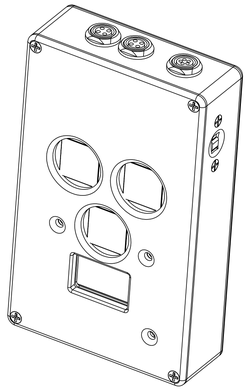

ISO VIEW
REFERENCE ONLY
SCALE 1/1

ITEM	SPECIFICATION	MATERIAL	DESCRIPTION	PART NUMBER	-301
20					
19					
18					
17					
16					
15					
14					
13		BIOMETRICS LTD PH: 44-1495-200-806	MEMBRANE KEY PAD	-511	1
12		LEMO USA 1-800-444-5366	FRONT BEZEL FOR RECEPTICLE	-510	3
11		LEMO USA 1-800-444-5366	MINUTURE CONNECTOR RECEPTICLE 5 PIN MODEL ECG OB	-509	1
10		LEMO USA 1-800-444-5366	MINUTURE CONNECTOR RECEPTICLE 4 PIN MODEL ECG-OB	-508	2
9		LEMO USA 1-800-444-5366	JAMNUT, HEX FOR LEMO CONNECTORS	-507	3
8		LEMO USA 1-800-444-5366	GROUND STRAP, FOR COMMON TERMINATION	-506	1
7		C&K COMPONENTS, INC. PH: 1-800-635-5936	SWITCH, POWER MODEL M1	-505	1
6		BIOMETRICS LTD PH: 44-1495-200-806	CIRCUIT BOARD FACIA PCB	-504	1
5		BIOMETRICS LTD. PH: 44-1495-200-806	CIRCUIT BOARD, DIGITAL PCB	-503	1
4		BIOMETRICS LTD. PH: 44-1495-200-806	CIRCUIT BOARD ANALOG PCB	-502	1
3			BATTERY, 9 VOLT DURACELL	-501	1
2	2-56 UNC-2B X .250 L, CRES		SCREW, MACHINE-FLAT COUNTERSINK HEAD 82°	MS-51959-3	2
1			NUT SELF-LOCKING, HEX 2-56 UNC	MS21042-02	2
			JOINT EXCURSION SYSTEM ENCLOSURE ASSEMBLY	-301	

5. ALL REFERENCED SPECIFICATIONS AND STANDARDS SHALL BE OF THE LATEST REVISION LEVEL OR AS SPECIFIED IN THE PROCUREMENT DOCUMENT. IN CASE OF CONFLICT, THE PROCUREMENT DOCUMENT SHALL TAKE PRECEDENCE.
4. THIS ASSEMBLY DOES NOT CONTAIN FRACTURE CRITICAL PARTS.
3. ALL DIMENSIONS ARE IN INCHES.
2. FABRICATION TOLERANCES & PRACTICES PER SKZ36103755D.
1. INTERPERT DRAWING PER JPG 8500.4D, ENGINEERING DRAWING SYSTEM MANUAL.

NOTES: UNLESS OTHERWISE SPECIFIED

DIMENSIONAL TOLERANCE UNLESS NOTED OTHERWISE
.0 ± .1 .000 ± .005
.00 ± .02 ANGULAR ± .5°

SURFACE FINISH IN MICROINCHES RMS UNLESS NOTED OTHERWISE N/A

FRACTURE CRITICAL: [ ] YES [X] NO

NEXT ASSY: FALSE

DWG FILENAME: SEG46117981.DRW

[ ] FLT HDWR [ ] APPLICABLE GSE [X] OTHER (SPECIFY) _____

SIGNATURES		DATE
DR	P. VAN GOEY	6-Jan-01
ENG	G. DALRYMPLE	
CH		
APP	T. APPROVER	99/99/99
QE	T. QE	99/99/99
MATL	T. MATERIALS	99/99/99
STRESS	T. STRESS	99/99/99
AUTH	T. AUTHORIZER	99/99/99
	TEST APP	99/99/99

NATIONAL AERONAUTICS AND SPACE ADMINISTRATION
LYNDON B. JOHNSON SPACE CENTER HOUSTON, TEXAS

JOINT EXCURSION SYSTEM ENCLOSURE, ASSEMBLY

PROJECT: HRF/ETAC

SIZE	CODE IDENT NO	DWG NO	REV
D	21356	SEG46117981	TST

SCALE 1/1 ORG EA5 SHEET 1 OF 3

STATUS: Check for DCNs against the drawing.

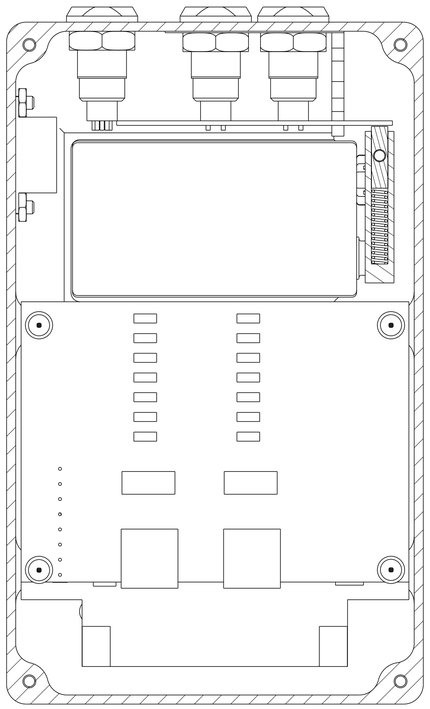

SECTION C-C
SCALE 2/1

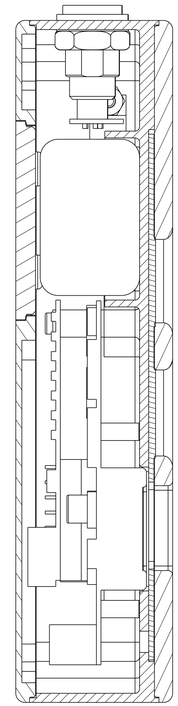

SECTION A-A
SCALE 2/1

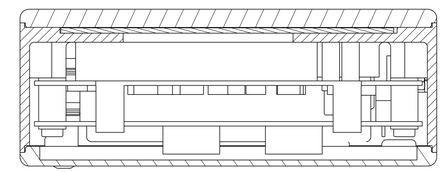

SECTION D-D

SIZE	CODE ID NO	DWG NO	REV
D	21356	SEG&46117981	TST
SCALE 1/1	ORG	SHEET 2 OF 3	

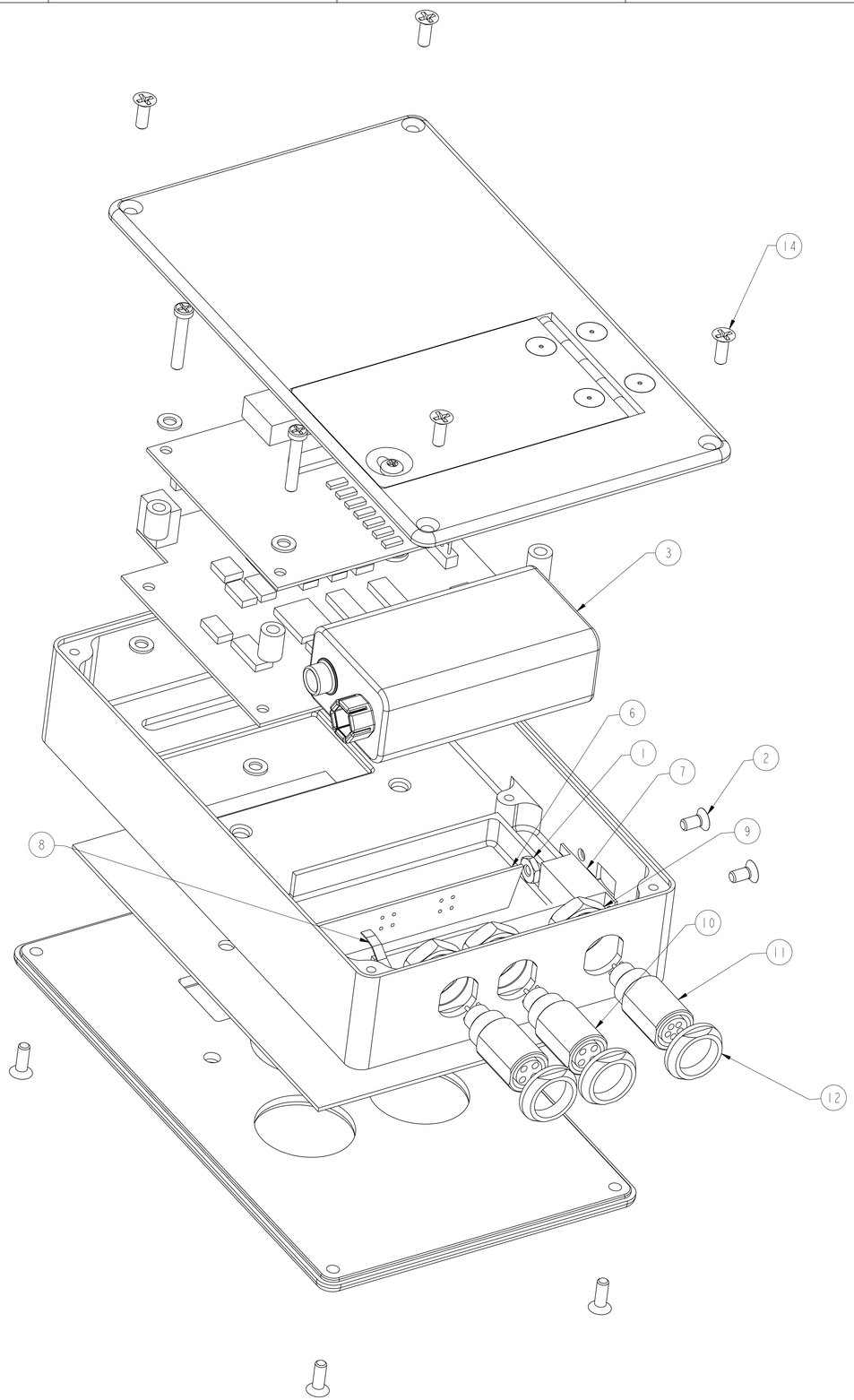

SCALE 2/1

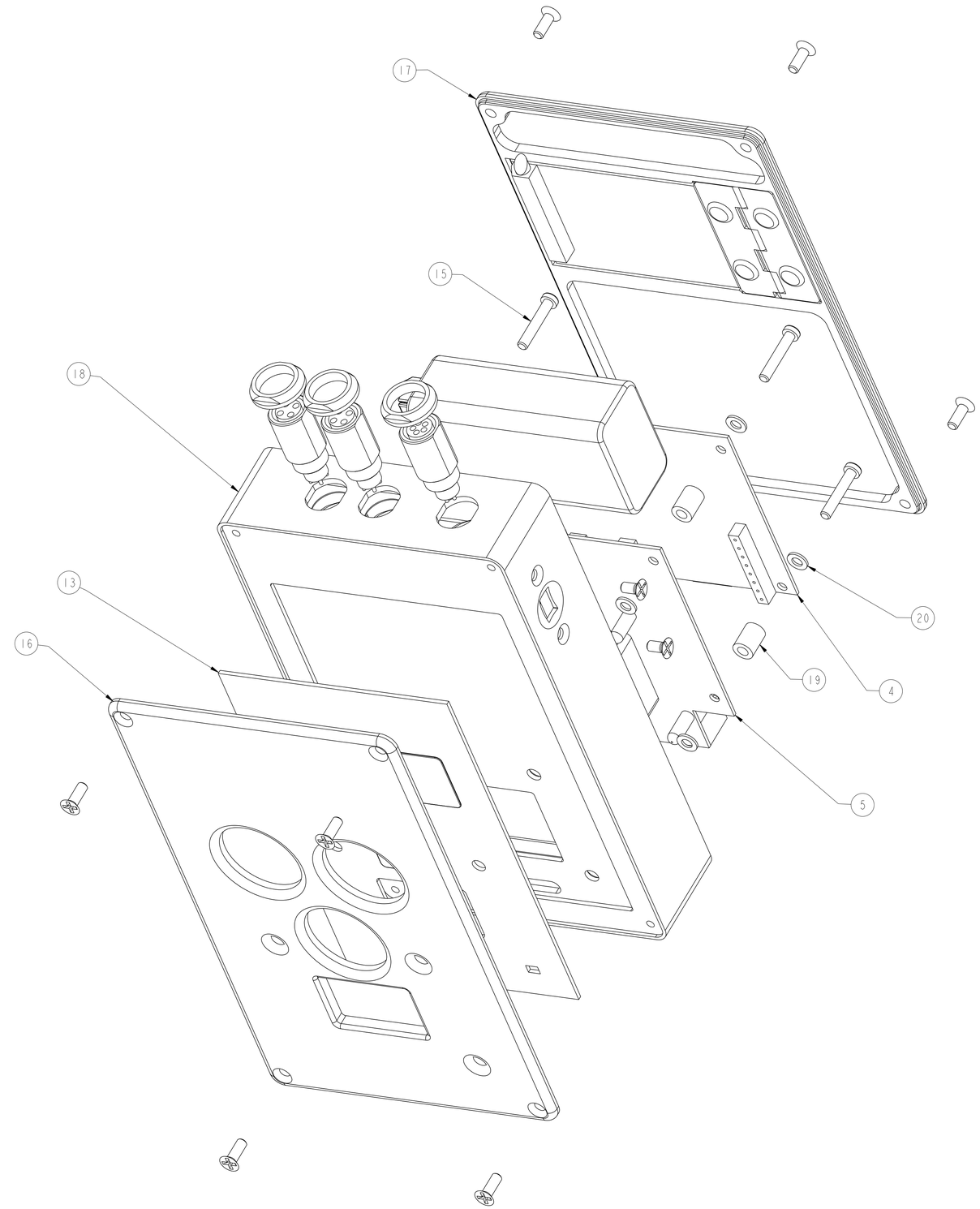

SCALE 2/1

SIZE	CODE ID NO	DWG NO	REV
D	21356	SEG46117981	TST
SCALE 1/1	ORG	SHEET 3 OF 3	