REV	ZONE	DESCRIPTION OF CHANGE

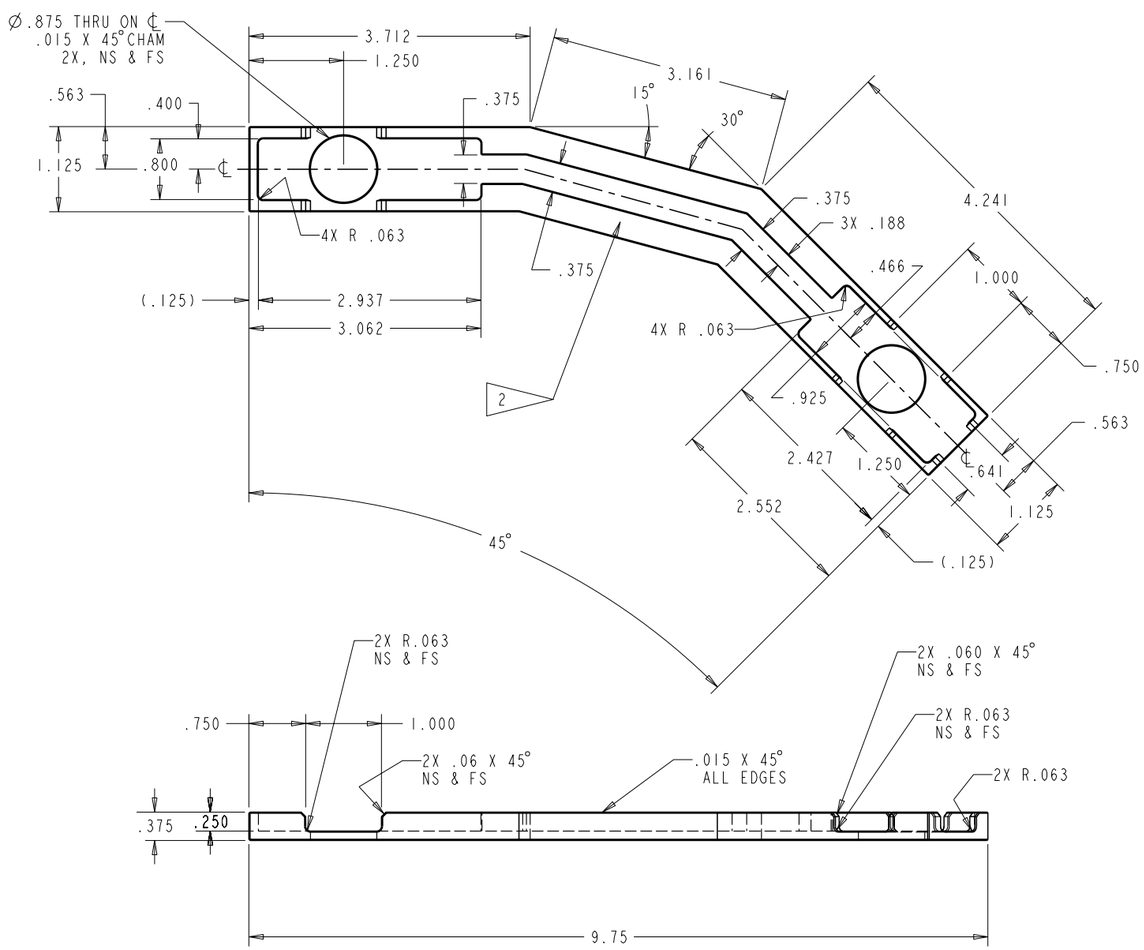

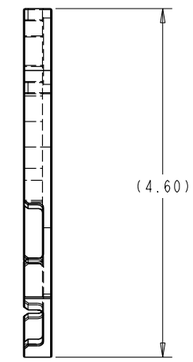

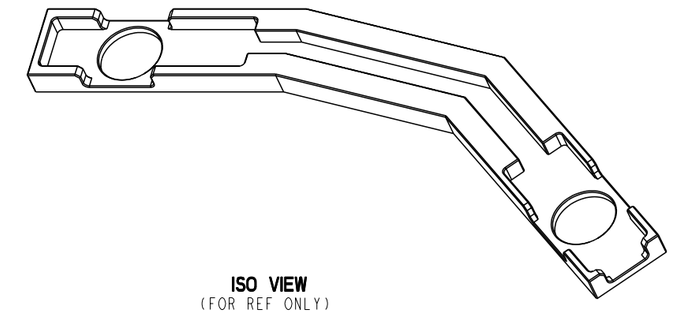

ISO VIEW
(FOR REF ONLY)

5. BREAK ALL SHARP EDGES BY .010 -.020 AND ROUND ALL CORNERS TO .02 - .04 R.
4. ALL DIMENSIONS ARE IN INCHES.
3. CLEAN TO LEVEL GC PER NASA/JSC PRC-5001.
2. FABRICATION TOLERANCES AND PRACTICES PER SKZ36103755.
1. INTERPRET PER JPG 8500.4, ENGINEERING DRAWING SYSTEM MANUAL.

NOTES: UNLESS OTHERWISE SPECIFIED

2 PART NAME SHALL BE MARKED BY ENGRAVING IN 1/8 INCH HIGH GOTHIC CHARACTERS PER NASA/JSC PRC-9002. LOCATE APPROXIMATELY AS SHOWN IMPRESSIONS SHALL BE FILLED WITH ITEM 3.

1 ANODIZE PER NASA/JSC PRC-5006,TYPE II,CLASS 2, COLOR: TURQUOISE, REF FED-STD-595, COLOR SPECIFICATION #15187.

FLAG NOTES

T. APPROVER
T. QE
T. MATERIALS
T. STRESS
T. AUTHORIZER
TEST APP

QTY	PART NUMBER	DESCRIPTION	MATERIAL	SPECIFICATION	ITEM
AR	A382	CHEMGLAZE PERMANENT ENAMEL	BLACK POLYURETHANE	LORD CORPORATION CARY, NC.	2
X	-001	JES CALIBRATION TEMPLATE HIP/KNEE JCT	6061-T6 ALUM. 9.75 X 4.60 X .38	AMS-QQ-A-250/11	1

99/99/99
STANDARD GENERAL TOLERANCE UNLESS NOTED OTHERWISE
.0 ± .02 .000 ± .005
.00 ± .02 ANGULAR ± .5°

99/99/99
SURFACE FINISH IN MICROINCHES RMS UNLESS NOTED OTHERWISE 125√

99/99/99
FRACTURE CRITICAL ASSY
☐ CRITICAL SEG46118331
☒ NO CAD FILENAME SDG46118328-001.DRW

99/99/99
☒ FLT HDWR ☐ APPLICABLE GSE
☐ OTHER (SPECIFY)

SIGNATURES		DATE
DR	J.MYRICK	30-Jan-01
ENG	G.DALRYMPLE	30-Jan-01
CH		
APP		
QE		
MATL		
STRESS		
AUTH		

NATIONAL AERONAUTICS AND SPACE ADMINISTRATION
LYNDON B. JOHNSON SPACE CENTER HOUSTON, TEXAS

JES CALIBRATION TEMPLATE HIP/KNEE
MACHINE DETAIL

PROJECT HRF TST

SIZE	CODE IDENT NO	DWG NO	REV
D	21356	SDG46118328	

SCALE 1:1 ORG EA5 SHEET 1 OF 1

STATUS: Check for DCNs against the drawing.