REV	ZONE	DESCRIPTION OF CHANGE

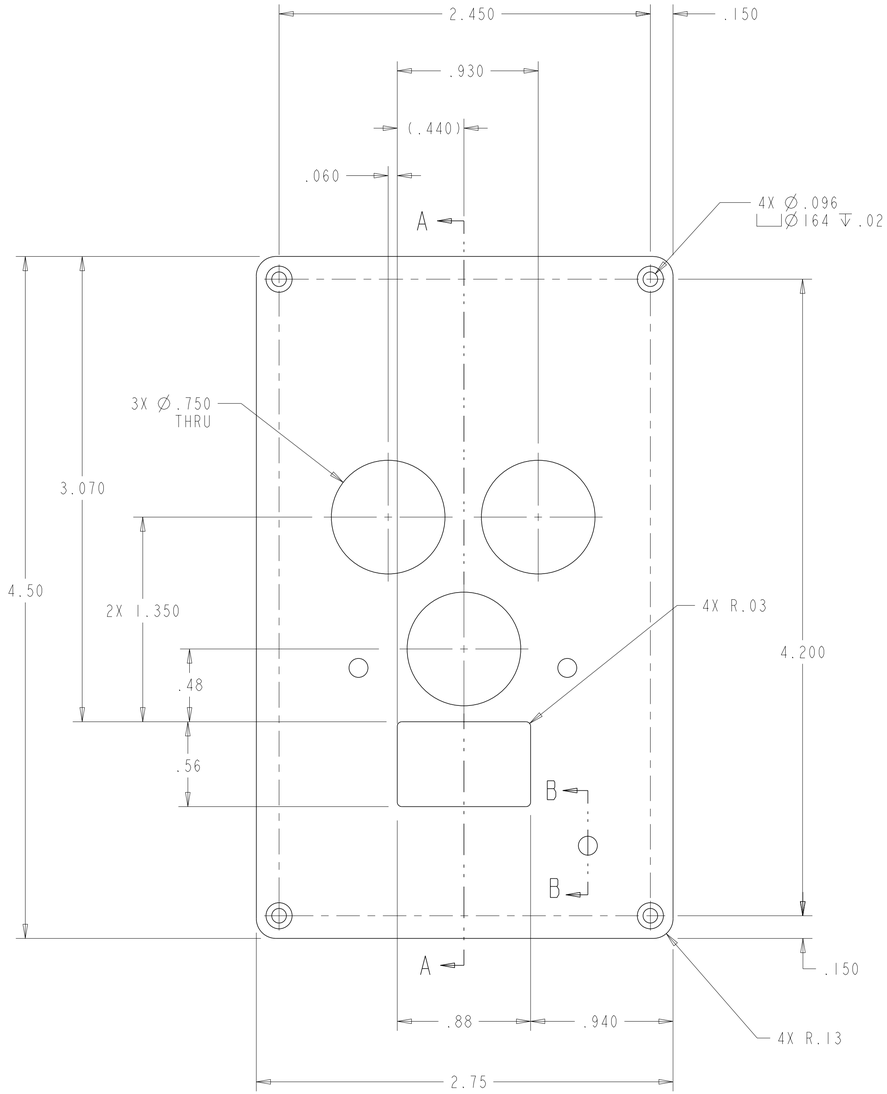

-001

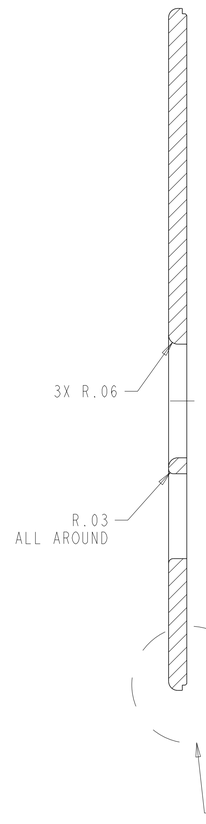

SECTION A-A

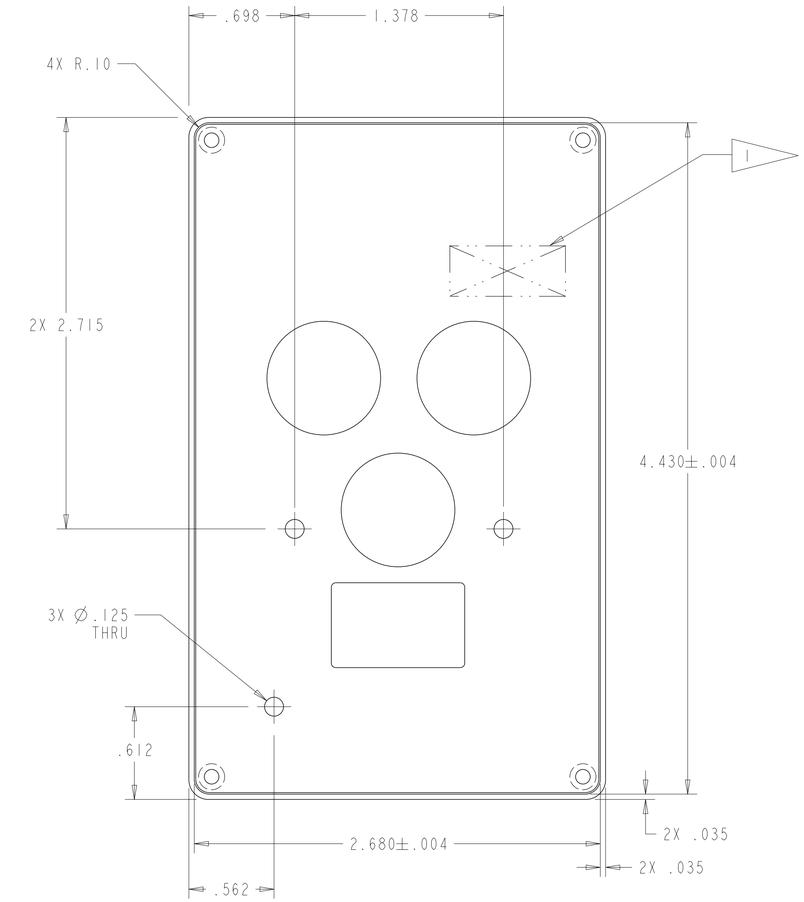

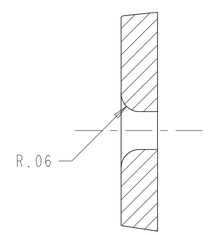

SECTION B-B
SCALE 4:1
APPLICABLE 3X

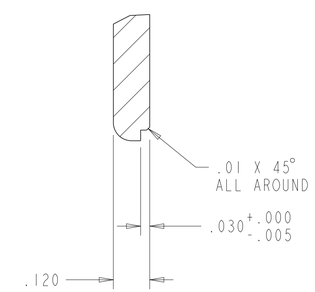

DETAIL C
SCALE 4:1
APPLICABLE 4X

1 RUBBER STAMP PART NUMBER AND SERIAL NUMBER IN 1/8 HIGH GOTHIC CHARACTERS PER NASA/JSC PRC-9002. LOCATE APPROXIMATELY AS SHOWN.

FLAG NOTES

6. ANODIZE PER NASA/JSC PRC-5006, TYPE II, CLASS 2, DYED: TORQUOISE REF FED-STD-595, COLOR SPECIFICATION #15187.
5. BREAK ALL SHARP EDGES AND ROUND ALL CORNERS TO .02 - .04 R.
4. ALL DIMENSIONS ARE IN INCHES.
3. CLEAN PER NASA/JSC PRC-5001 TO LEVEL GC.
2. FABRICATION TOLERANCES AND PRACTICES PER SKZ-36103755.
1. INTERPRET DRAWING PER JPG 8500.4.

NOTES: UNLESS OTHERWISE SPECIFIED

QTY	PART NUMBER	DESCRIPTION	MATERIAL	SPECIFICATION	ITEM
	-001	FRONT COVER PLATE, JOINT EXCURSION SYSTEM ENCLOSURE	AL ALY, 6061-T651 4.50 X 2.75 X .060	QQ-A-250/11	

DIMENSIONAL TOLERANCE UNLESS NOTED OTHERWISE
.0 ± .1 .000 ± .005
.00 ± .02 ANGULAR ± .5°

SURFACE FINISH IN MICROINCHES RMS UNLESS NOTED OTHERWISE 125√

FRACTURE CRITICAL ☐ YES ☒ NO

NEXT ASSY SEG46117981

DWG FILENAME SDG46117989.DRW

☐ FLT HDWR ☐ APPLICABLE GSE
☐ OTHER (SPECIFY) _____

SIGNATURES		DATE
DR	P. VAN GOEY	8-Jan-01
ENG	G. DALRYMPLE	
CH		
APP	T. APPROVER	99/99/99
QE	T. QE	99/99/99
MATL	T. MATERIALS	99/99/99
STRESS	T. STRESS	99/99/99
AUTH	T. AUTHORIZER	99/99/99
	TEST APP	99/99/99

NATIONAL AERONAUTICS AND SPACE ADMINISTRATION
LYNDON B. JOHNSON SPACE CENTER HOUSTON, TEXAS

FRONT COVER PLATE, JOINT EXCURSION SYSTEM ENCLOSURE

PROJECT HRF/ JES

SIZE	CODE IDENT NO	DWG NO	REV
D	21356	SDG46117989	TST

SCALE 1:1 ORG EA5 SHEET 1 OF 1

STATUS: Check for DCNs against the drawing.