REV	ZONE	DESCRIPTION OF CHANGE

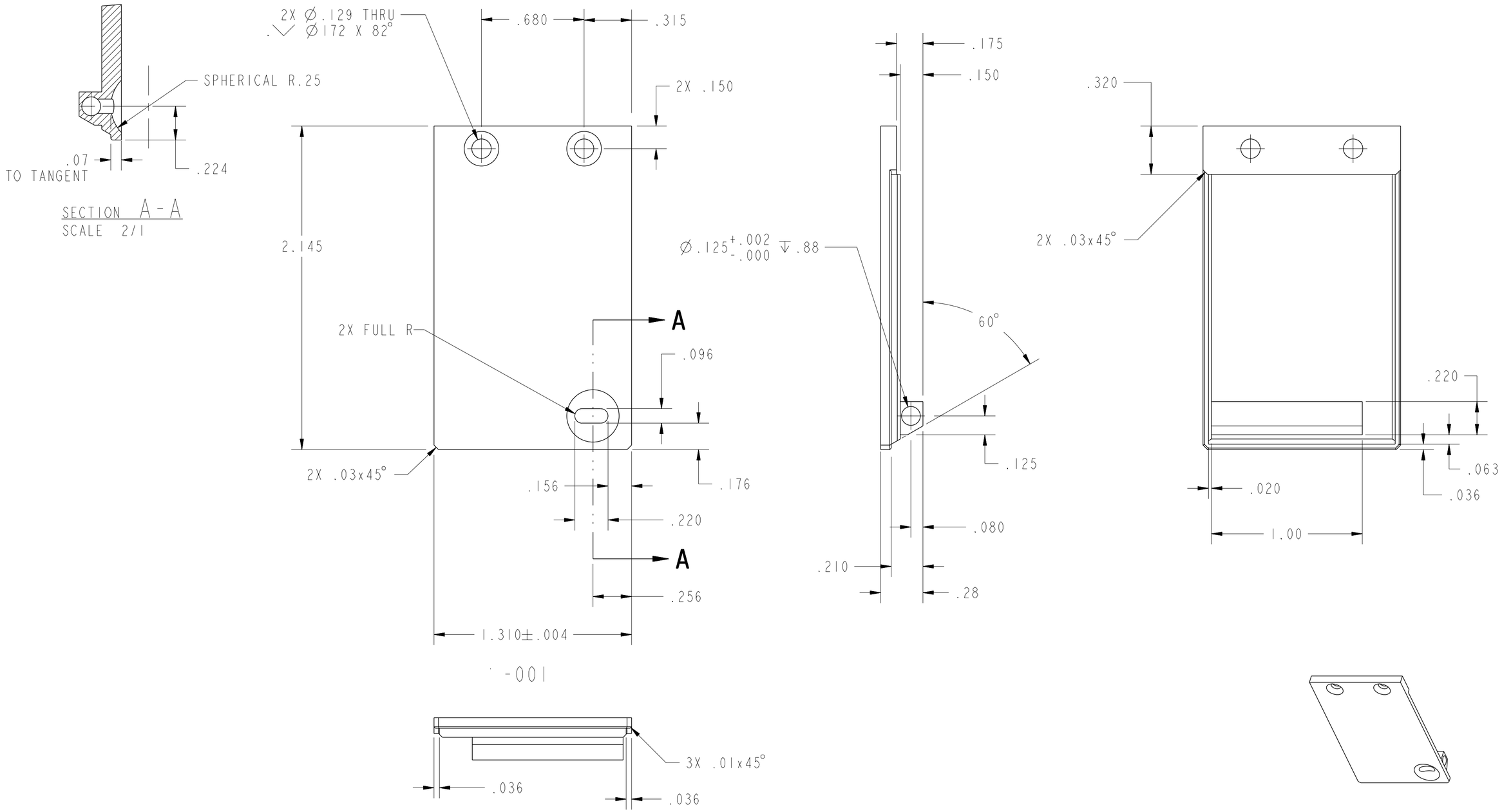

8. ANADOIZE PER NASA/JSC PRC-5006, TYPE II, CLAS I.
7. ALL REFERENCED SPECIFICATIONS AND STANDARDS SHALL BE OF THE LATEST REVISION LEVEL OR AS SPECIFIED IN THE PROCUREMENT DOCUMENT. IN CASE OF CONFLICT, THE PROCUREMENT DOCUMENT SHALL TAKE PRECEDENCE.
6. BAG AND TAG TO IDENTIFY PART NUMBER PER NASA/JSC PRC-9002.
5. CLEAN ALL SURFACES TO LEVEL GC PER NASA/JSC PRC-5001.
4. RADIUS ALL EDGES AND CORNERS .04-.06. FILLET RADII .02 MAX.
3. ALL DIMENSIONS ARE IN INCHES.
2. FABRICATION TOLERANCES & PRACTICES PER DWG SKZ36103755.
1. INTERPRET DRAWING PER JPG 8500.4, ENGINEERING DRAWING SYSTEM MANUAL.

NOTES: UNLESS OTHERWISE SPECIFIED

QTY	PART NUMBER	DESCRIPTION	MATERIAL	SPECIFICATION	ITEM
	-001	BATTERY DOOR	AL ALY, 6061-T651 2.145 X 1.310 X .28 THK.	QQ-A-250/11	1

DIMENSIONAL TOLERANCE UNLESS NOTED OTHERWISE
.0 ± 0.1 .000 ± 0.005
.00 ± 0.02 ANGULAR ± 0.5°

SURFACE FINISH IN MICROINCHES RMS UNLESS NOTED OTHERWISE 32

FRACTURE CRITICAL: [ ] YES [X] NO

NEXT ASSY SEG46117982

DWG FILENAME SDG46117986.DRW

[X] FLT HDWR [ ] APPLICABLE GSE
[ ] OTHER (SPECIFY) _____

SIGNATURES		DATE
DR	P. VAN GOEY	07-Jan-01
ENG	G. DALRYMPLE	
CH		
APP	T. APPROVER	99/99/99
QE	T. QE	99/99/99
MATL	T. MATERIALS	99/99/99
STRESS	T. STRESS	99/99/99
AUTH	T. AUTHORIZER	99/99/99
	TEST APP	99/99/99

PRELIMINARY

NATIONAL AERONAUTICS AND SPACE ADMINISTRATION
LYNDON B. JOHNSON SPACE CENTER HOUSTON, TEXAS

BATTERY DOOR FOR JES DETAIL

PROJECT ETAC/JES

SIZE	CODE ID NO	DWG NO	REV
C	21356	SDG46117986	TST

SCALE 2/1 ORG EA5 SHEET 1 OF 1

STATUS: Check for DCNs against the drawing.