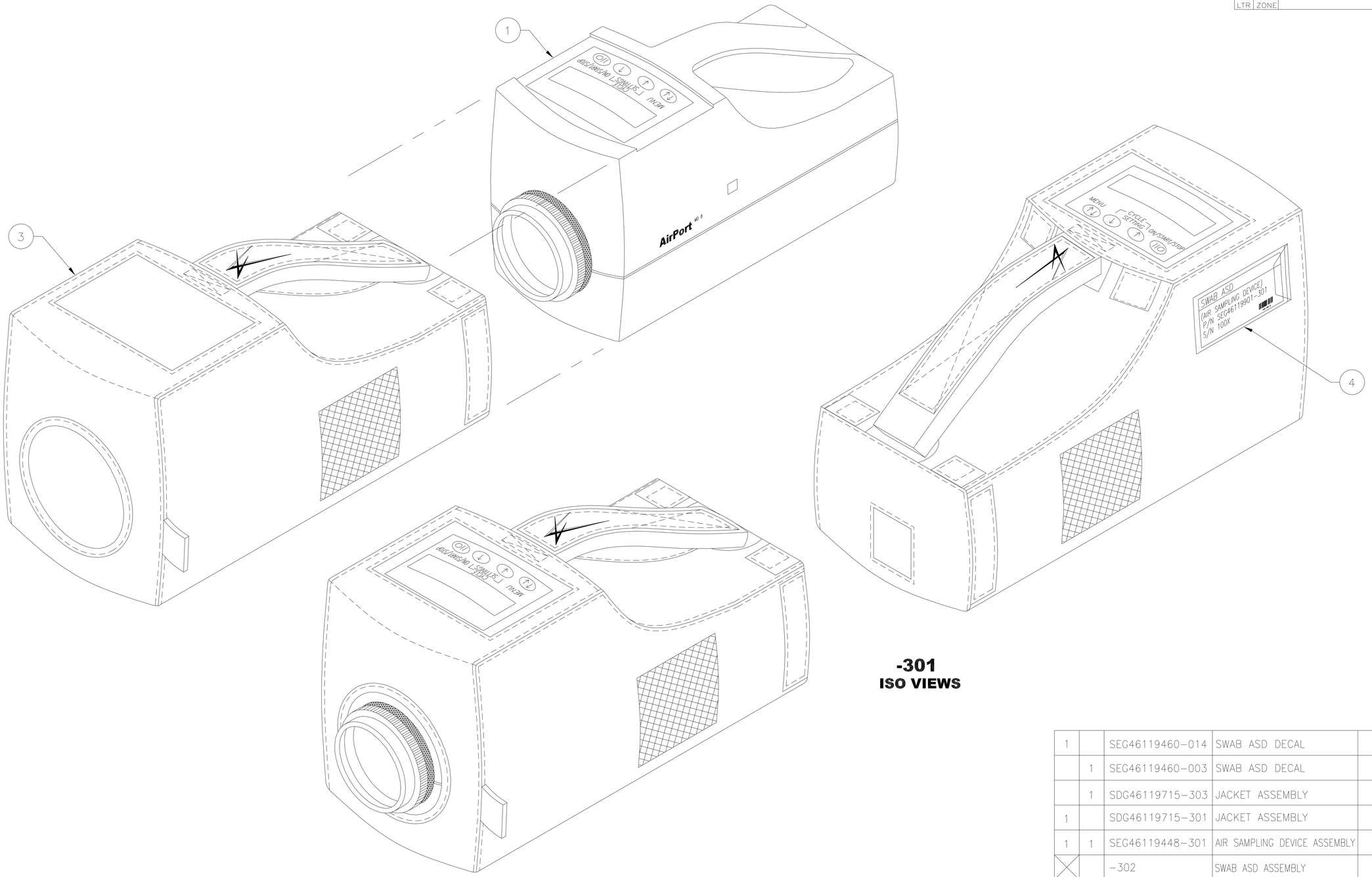

-301
ISO VIEWS

1		SEG46119460-014	SWAB ASD DECAL			5
	1	SEG46119460-003	SWAB ASD DECAL			4
	1	SDG46119715-303	JACKET ASSEMBLY			3
1		SDG46119715-301	JACKET ASSEMBLY			2
1	1	SEG46119448-301	AIR SAMPLING DEVICE ASSEMBLY			1
X		-302	SWAB ASD ASSEMBLY			
	X	-301	SWAB ASD ASSEMBLY WITH LM LOGO			
-302	-301	PART NUMBER	DESCRIPTION	MATERIAL	SPECIFICATION	ITEM

3. THIS ASSEMBLY DOES NOT CONTAIN FRACTURE CRITICAL PARTS.
2. CLEAN TO LEVEL GC PER NASA/JSC PRC-5001; WIPE CLEAN ALL SURFACES.
1. INTERPRET DRAWING PER NASA/JSC JPG 8500.4, ENGINEERING DRAWING SYSTEM MANUAL.

NOTES: UNLESS OTHERWISE SPECIFIED

UNLESS NOTED OTHERWISE DIM ARE IN INCHES, TOL. ARE
.0 ±.1 .000 ±.005
.00 ±.02 ANGULAR ±.5°
SURFACE FINISH IN MICROINCHES RMS UNLESS NOTED OTHERWISE ✓

FRACTURE CRITICAL
☐ YES
☒ NO

NEXT ASSY: SJG46120229

EQUIPMENT TYPE
☒ FLT HDWR ☐ APPLICABLE GSE
☐ OTHER (SPECIFY) _____

SIGNATURES		DATE
DR	ANDREW MISSICK	03/12/29
ENG	TIM HALEY	03/12/29
CH	HERMANN LUDL	03/12/29
APP	L. BAUER	12/29/03
QE	M. IWASA	12/31/03
MAT'L	H. KAO	12/30/03
STRESS	K. YEUNG	01/05/04
AUTH		
FINAL APP		1/5/04

NATIONAL AERONAUTICS AND SPACE ADMINISTRATION
LYNDON B. JOHNSON SPACE CENTER HOUSTON, TEXAS

SWAB ASD ASSEMBLY

PROJECT: E049 SWAB EXPERIMENT

SIZE	CAGE CODE	DWG NO	REV
D	21356	SEG46119901	NC

SCALE NONE | ORG EB4 | FMT A01OCT02 | SHEET 1 OF 2

STATUS: Check for DCNs against the drawing.

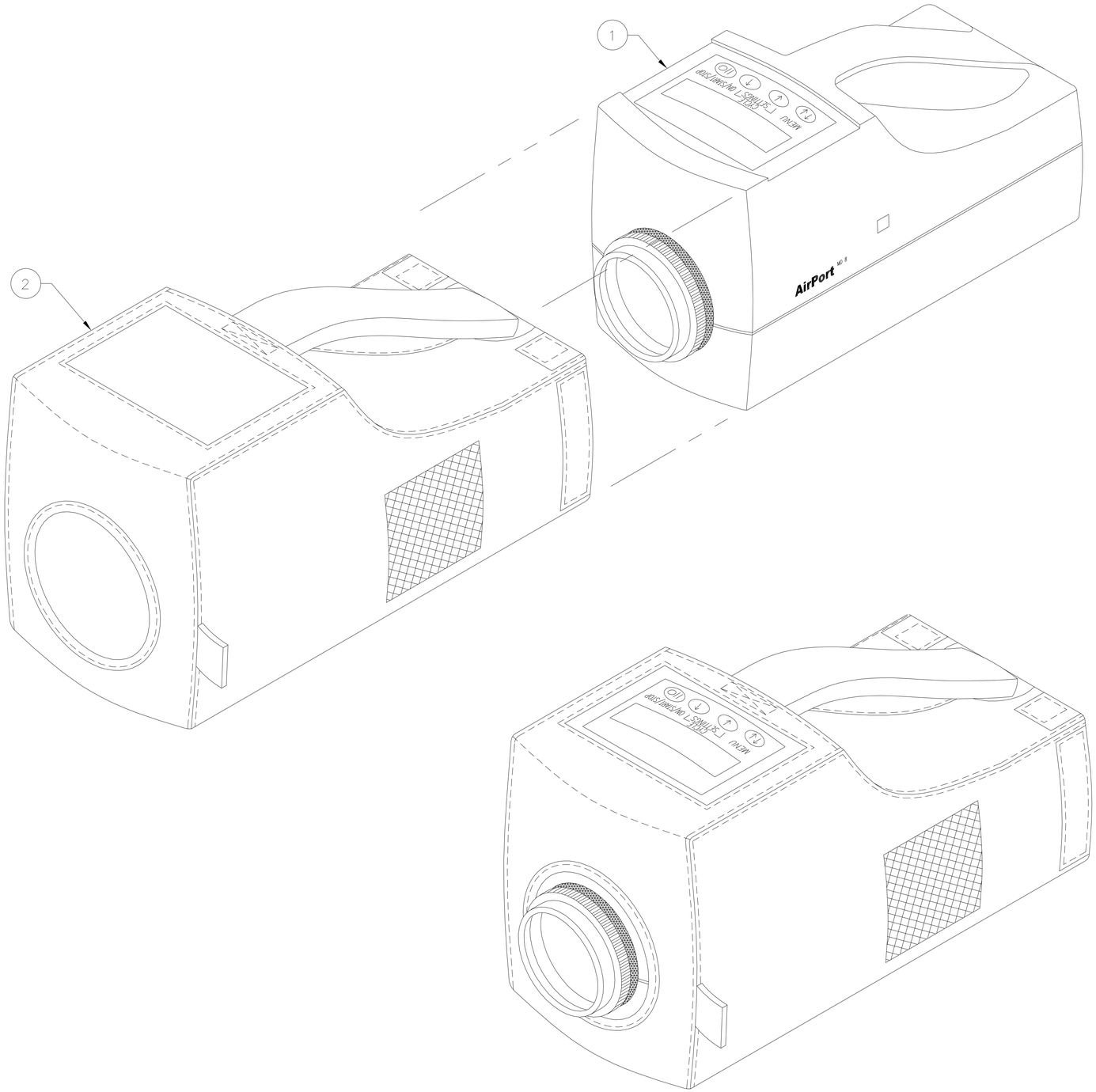

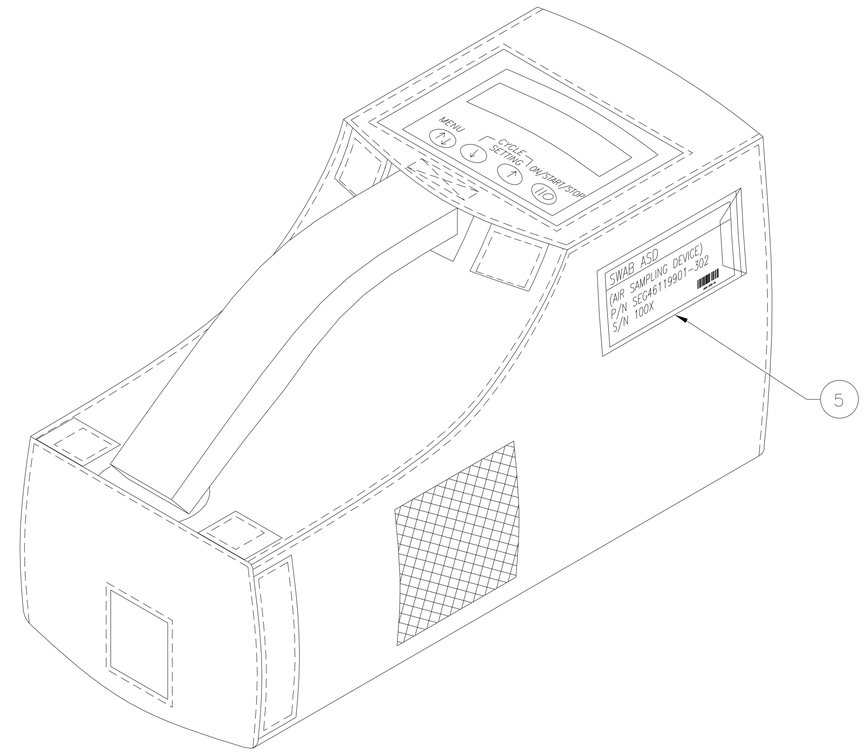

-302
ISO VIEWS

PROJECT	E049 SWAB EXPERIMENT		
SIZE D	CAGE CODE 21356	DWG NO SEG46119901	REV NC
SCALE NONE	ORG EB4	FMT A01OCT02	SHEET 2 OF 2