LTR	ZONE	REVISION

(CONTD ON SHEET 2)

25 STAKE PER NASA/JSC PRC-7002, FUSE F1,CAP C1, AND DIODE D1 USING RTV (ITEM 14).

24 MASK OFF SYSTEM CONTROL PCB PER NASA/JSC PRC-7002, CONNECTORS, C1, ALL IC'S, F1, HEADER PADS AND LARGE BLACK BODIED CHIPS WITH (ITEM 18). MASK CONNECTOR J3 USING TAPE (ITEM 18) PER NASA/JSC PRC-7002.

23 DESOLDER AND DISCARD FROM SYSTEM CONTROL PCB FUSE F1 AND HOLDER. INSTALL FUSE (ITEM 29) ONTO THE TWO OUTSIDE HOLES.

22 REMOVE HEADERS (3 PLACES) FROM SYSTEM CONTROL PCB (ITEM 3) AND DISCARD.

21 DESOLDER AND DISCARD FROM THE SYSTEM CONTROLLER PCB VENDOR CONNECTORS (J1), (J2), (J4) AND I/C1 SOCKET (28 PIN). AFTER REMOVING THE I/C, SOLDER 28 PIN I/C ONTO THE PCB IN PLACE OF THE SOCKET PER NASA/JSC PRC-7001.

20 PRIME AND CONFORMAL COAT LCD PCB PER NASA/JSC PRC-7002 USING PRIMER (ITEMS 16), NAPTHA (ITEM 15) AND RTV (ITEM 13).

19 MASK OFF LCD PCB, MOUNTING HOLES 4 TIMES, AND ALL GOLD PLATED SOLDER PADS 6 TIMES USING ESD TAPE (ITEM 18). AS SHOWN PER DETAIL H (BOTTOM).

18 STRIP AND SOLDER ONE EACH WIRE 24 AWG CUT TO LENGTH .72 ±.02 INCH TO HEADER PADS EXPOSED FROM HEADER REMOVAL USING (ITEMS 9 & 10) 16 TIMES, PER DETAIL H (TOP).

17 REMOVE 16 PIN HEADER FROM LCD PCB AND DISCARD, PER VIEW H (BOTTOM).

16 SOLDER ONE EACH WIRE 22 AWG (ITEMS 10 & 11) CUT TO LENGTH 2" TO HEADER PADS EXPOSED FROM HEADER REMOVAL, USING SOLDER (ITEM 9) AND WIRE (ITEM 10 & 11) 2 TIMES, PER DETAIL H (BOTTOM).

15 REMOVE HEADER PINS (2 TIMES) FROM LCD PCB LABELED AS V+ AND V- AND DISCARD, PER DETAIL H (BOTTOM).

14 TEMPORARILY REMOVE LCD PCB FROM SYSTEM CONTROLLER PCB (ITEM 3) AND RETAIN ALL HARDWARE.

13 DISSASSEMBLE AND REMOVE PCB'S FROM ASD UNIT ASSY. RETAIN ALL COMMERCIAL MOUNTING HARDWARE.

12 PANDUIT CORP., TINLEY PARK, IL

11 VELCRO USA INC, MANCHESTER, NH

10 PARKS CORP, SOMEREST, MA

9 LITTELFUSE CORP, DES PLAINES, IL

8 DOW CORNING, MIDLAND, MI

7 LOCTITE CORP., ROCKY HILL, CT

6 INDEPENDENT INK INC., GARDENA, CA

5 HISCO CO., TACOMA, TX

4 FURON, ANAHEIM, CA

3 SARTORIUS AG, GOETTINGEN, GERMANY

2 NEXT ASSEMBLY FOR -301 IS SEG46119901.
NEXT ASSEMBLY FOR -302 IS NA.

1 MAKE FROM PN 16757, AIRPORT MD8, SARTORIUS AG, GOETTINGEN, GERMANY.

FLAG NOTES:

13. COTS (COMMERCIAL OF THE SHELF) REFERS TO THE ITEMS THAT ORIGINALLY CAME WITH THE UNIT.
12. CONFORMAL COAT AND STAKE PER NASA/JSC PRC-7002.
11. UPON REASSEMBLY, APPLY LOCTITE (ITEM 17) TO ALL SCREW THREADS PER MANUFACTURER'S INSTRUCTIONS.
10. DEMOISTURIZING PROCESS NOT TO BE PERFORMED PRIOR TO STAKING, PRIMER AND CONFORMAL COATING.
9. THIS ASSEMBLY CONTAINS ESD SENSITIVE COMPONENTS. HANDLE PER NASA-STD-87397.
8. LABEL PER SSP57000.
7. SOLDER PER NASA/JSC PRC-7001.
6. THIS ASSEMBLY DOES NOT CONTAIN FRACTURE CRITICAL PARTS.
5. BAG AND TAG TO IDENTIFY PART NUMBER PER NASA/JSC PRC-9002.
4. ALL DIMENSION ARE IN INCHES.
3. CLEAN TO LEVEL GC PER NASA/JSC PRC-5001; WIPE CLEAN ALL SURFACES.
2. FABRICATION TOLERANCES & PRACTICES PER NASA/JSC DWG SKZ36103755.
1. INTERPRET DRAWING PER NASA/JSC JPG 8500.4, ENGINEERING DRAWING SYSTEM MANUAL.

NOTES: UNLESS OTHERWISE SPECIFIED

-801	-302	-301	PART NUMBER	DESCRIPTION	MATERIAL	REF DES	SPECIFICATION	ITEM
1			SEG46119453-301	ASD FOAM BATTERY GUIDE ASSY				32
AR			PLT1M-C76	CABLE TIE	TEFZEL		12	31
1			RLR07C4222FS	RESISTOR, 42.2K OHMS		R9	MIL-PRF-39017	30
1			263003	FUSE 3A			9	29
1			6989521	HOUSING UPPER				28
1			6989522	HOUSING BOTTOM				27
1			RLR07C1003FS	RESISTOR, 100K OHMS		R8	MIL-PRF-39017	26

-801	-302	-301	PART NUMBER	DESCRIPTION	MATERIAL	REF DES	SPECIFICATION	ITEM
AR			M23053/8-003-C	TUBING, HEAT SHRINK	PVDF		MIL-I-23053	25
3			39-00-0088	TERMINAL, MALE			49	24
1			39-01-4037	HOUSING, MOLEX			49	23
1			BPHM4	INSERT			64	22
1			653	THUMB SCREW			62	21
1			69898523	FOIL ASSEMBLY			3	20
AR			73X	INK, MARKING, BLACK			6	19
AR			5419-1/2	ESD KAPTON TAPE			61	18
AR			222	SEALANT THREAD			7	17
AR			DC 1204	PRIMER			8	16
AR			2713	THINNER	NAPTHA		10	15
AR			3145	ADHESIVE SILICONE			61	14
AR			3140	ADHESIVE SILICONE			61	13
AR			191033	ADHESIVE VELCRO, 1" HOOK			11	12
AR			M22759/11-22-0	22 AWG BLACK WIRE	TFE TEFLON		MIL-W-27500	11
AR			M22759/11-22-9	22 AWG WHITE WIRE	TFE TEFLON		MIL-W-27500	10
AR			63/37.015P3REL15	SOLDER			5	9
		1	SEG46119450-301	ASD Li-BCX BATTERY PACK ASSY				8
	AR	AR	R10480	SILICONE RUBBER, 1/4" THK			4	7
	1	1	SDG46119462-001	ASD DECAL				6
1			17801	FILTER ADAPTER			3	5
1			69898518	COMPRESSOR UNIT			3	4
1			69898519	SYSTEM CONTROL W/ DISPLAY			3	3
1			69898520	RECHARGING PCB			3	2
X	1	1	-801	AIR SAMPLING DEVICE			1	1
	X		-302	AIR SAMPLING DEVICE ASSEMBLY WITHOUT BATTERY PACK				
		X	-301	AIR SAMPLING DEVICE ASSEMBLY				

UNLESS NOTED OTHERWISE DIM ARE IN INCHES, TOL. ARE
.0 ±.1 .000 ±.005
.00 ±.02 ANGULAR ±.5°
SURFACE FINISH IN MICROINCHES RMS UNLESS NOTED OTHERWISE 125 ✓
FRACTURE CRITICAL
☐ YES
☒ NO
NEXT ASSY 2
EQUIPMENT TYPE
☒ FLT HDWR ☐ APPLICABLE GSE
☐ OTHER (SPECIFY) _____

SIGNATURES		DATE
DR	ANDREW MISSICK	04/01/12
ENG	TIM HALEY	04/01/12
CH	HERMANN LUDL	04/01/12
APP		
QE		
MAT'L		
STRESS		
AUTH		

NATIONAL AERONAUTICS AND SPACE ADMINISTRATION
LYNDON B. JOHNSON SPACE CENTER HOUSTON, TEXAS

AIR SAMPLING DEVICE ASSEMBLY
ALTERED ITEM DRAWING

PROJECT E049 SWAB EXPERIMENT

SIZE	CAGE CODE	DWG NO	REV
D	21356	SEG46119448	

SCALE NONE ORG EB4 FMT A010CT02 SHEET 1 OF 7

49 MOLEX, LISLE, IL

48 STRIP AND SOLDER REMAINING ENDS OF WIRE FROM CHARGING PCB (J1) PINS 3 & 4 TO SYSTEM PCB (J2) PINS 1 AND 2, PER WIRE LIST.

47 SOLDER WIRE (ITEM 11) FROM (J1) PIN 7 TO PIN 8, USING SOLDER (ITEM 9).

46 REATTACH HEAT SINK TO PCB AND T1, USING VENDOR SUPPLIED HARDWARE.

45 INSERT TERMINAL ENDS OF WIRES PREPARED IN PRIOR FLAGNOTE (PER WIRE LIST) INTO MOLEX HOUSING (ITEM 23) (J6). PER DETAIL J. PERMANENT INK MARK J6 ONTO CONNECTOR (ITEM 23) IN .125" HIGH CHARACTERS USING BLACK INK (ITEM 19), PER NASA/JSC PRC-9002.

44 STRIP AND CRIMP REMAINING END OF WIRES FROM (J1) CHARGER PCB PINS 5, 6 AND 9 WITH MALE CRIMP TERMINAL (ITEM 24).

43 SOLDER WIRE (ITEM 10) TO (J1) PINS 5, 6 AND 9 ON CHARGER PCB PER THE WIRING LIST.

42 PRIME AND CONFORMAL COAT PER NASA/JSC PRC-7002, USING ADHESIVE (ITEM 13), NAPTHA (ITEM 15) & PRIMER (ITEM 16) ON CHARGER PCB.

41 MASK OFF TRANSISTOR T1 USING TAPE (ITEM 18), PER NASA/JSC PRC-7002.

40 TEMPORARILY REMOVE THE HEATSINK FROM THE PCB AND FROM TRANSISTOR T1 AND RETAIN NUTS, SCREWS AND HEATSINK.

39 DESOLDER AND REMOVE COTS WIRES FROM THE SYSTEM CONTROL PCB (J2). PINS 1 & 2.

38 DESOLDER, REMOVE AND DISCARD WIRES ORIGINATING FROM CHARGING PCB (J1) PINS 1 & 2 AND TERMINATING AT PANEL CHARGING JACK. DESOLDER AND DISCARD 9-PIN HEADER FROM THE CHARGER PCB PER SECTION B-B.

37 USING VENDER MOUNTING HARDWARE RE-CONNECT THE LCD PCB TO THE SYSTEM CONTROL PCB USING LOCTITE (ITEM 17).

36 STRIP AND SOLDER WIRE (ATTACHED IN FLAG NOTE 16) FROM LCD PCB LABELED V- TO SYSTEM CONTROL PCB LOCATION PER THE WIRING LIST AND DETAILS G & H.

35 STRIP AND SOLDER WIRE (ATTACHED IN FLAG NOTE 16) FROM LCD PCB LABELED V+ TO SYSTEM CONTROL PCB LOCATION PER THE WIRING LIST AND DETAILS G & H.

34 STRIP REMAINING END OF WIRE ON LCD PCB (ATTACHED IN FLAG NOTE 18) AND SOLDER TO SYSTEM CONTROLER PCB AT 16 PIN HEADER LOCATION ONE TO ONE. 16 TIMES.

33 STRIP AND SOLDER REMAINING END OF MOTOR WIRES (P1) TO SYSTEM CONTROL PCB AT (J1) LOCATION PER DETAIL G (BOTTOM) 2 TIMES PER WIRE LIST.

32 STRIP AND SOLDER WIRES (ITEM 10) TO MTR (+) AND ITEM (11) TO MTR (-) ON THE MOTOR ASSY (P1) PER DETAIL K. APPLY HEAT SHRINK TUBING (ITEM 25) OVER THE SOLDER CONNECTION AND WIRE (ITEMS 10 AND 11).

31 DESOLDER, REMOVE AND DISCARD WIRES FROM MOTOR ASSY (P1) MTR+ AND MTR- TWO TIMES AS SHOWN IN DETAIL K.

30 STRIP AND SOLDER REMAINING END OF ENCODER WIRES TO SYSTEM CONTROL PCB (ITEM 3) AT J4 LOCATION PER DETAIL D (BOTTOM), 5 TIMES PER WIRE LIST.COVER WITH SHRINK TUBING (ITEM 25).

29 STRIP AND SOLDER WIRE (ITEM 11) TO ENCODER (P4) PER DETAIL K, 5 TIMES PER WIRE LIST.

28 DESOLDER, REMOVE AND DISCARD WIRES FROM ENCODER (P4) 5 TIMES AS SHOWN PER DETAIL K.

27 PERMANENT INK MARK +-, +-, V-, V+, J1,J2,J3 & J4 CONNECTORS IN .125 CHARACTERS AS SHOWN USING BLACK MARKING INK (ITEM 19), PER NASA/JSC PRC-9002, LOCATED ON THE SYSTEM CONTROL PCB (ITEM 3), DETAIL G (BOTTOM).

26 PRIME AND CONFORMAL COAT PER NASA/JSC PRC-7002 USING PRIMER (ITEMS 16), NAPTHA (ITEM 15) AND ADHESIVE (ITEM 13).

FLAG NOTES: (CONTD FROM SHEET 1)

72 REASSEMBLE UNIT USING COTS SUPPLIED HARDWARE AND APPLY LOCTITE (ITEM 17) TO ALL SCREWS.

71 RE-INSTALL COTS FASTENERS USING THREAD SEALANT (ITEM 17) AND TORQUE TO 5/6 IN LB ABOVE RUNNING TORQUE.

70 RE-INSTALL COTS FASTENERS USING THREAD SEALANT (ITEM 17) AND TORQUE TO 8-10 IN LB ABOVE RUNNING TORQUE.

69 TRIM PROTRUSION .8IN, TO BLEND IN WITH REST OF UNIT AT THIS SURFACE. SEAL THE TRIMMED AREA WITH ADHESIVE (ITEM 14).

68 COVER SIDES OF RIGHT & LEFT LEGS OF BATTERY GUIDE (ITEM 32) WITH ADHESIVE SILICONE (ITEM 14). INSTALL BATTERY GUIDE INTO BOTTOM HALF AS SHOWN IN SECTION C-C & VIEW A-A WITH BATTERY ACCESS DOOR REMOVED.

67 CUT SILICONE RUBBER (ITEM 7) AND ATTACH TOGETHER USING ADHESIVE SILICONE (ITEM 14) AS SHOWN PER VIEW F-F. THEN AFFIX TO METAL BATTERY PLATE USING ADHESIVE SILICONE (ITEM 14). REINSTALL PLATE ONTO MOUNTING HOLES USING SCREWS. APPLY SEALANT THREAD (ITEM 17) ONTO SCREWS PER MANUFACTURER'S INSTRUCTIONS.

66 REMOVE BATTERY PLATE AND TRIM BATTERY PLATE MOUNT BACK .13 ±.05" AS SHOWN IN VIEW F-F.

65 DESOLDER EXISTING ITEMS R8, R9. INSTALL ITEM 26 INTO R8 AND ITEM 30 INTO R9. SOLDER PER NASA/JSC PRC-7001.

64 VMP, VALENCIA, CA

63 FILL LEFT HAND AND RIGHT HAND GROOVES WITH RTV (ITEM 14) SO THAT RTV IS FLUSH TO TOP OF GROOVE. ATTACH VELCRO (ITEM 12) AND TRIM EXCESS TO FIT GROOVE SIZE. VELCRO SHOULD BE CUT TO APPROXIMATELY 1" LONG.

62 METRIC MULTISTANDARD, DALLAS, TX

61 3M CORP, DALLAS, TEXAS

60 DESOLDER BATTERY WIRES FROM BATTERY CHARGER PCB AND FILL CHARGER PORT OPENING LEVEL WITH SURFACE USING ADHESIVE (ITEM 14). REMOVE EXCESS ADHESIVE.

59 RECONNECT (J3) TO FOIL ASSEMBLY (ITEM 20).

58 REMOVE AND DISCARD ALL FOUR RUBBER INSERTS.

57 ATTACH BATTERY ACCESS COVER USING THUMB SCREW (ITEM 21).

56 CUT SILICONE RUBBER (ITEM 7) AS SHOWN IN DETAIL E AND ATTACH TO INSIDE OF REAR ACCESS DOOR 2 PLACES AS SHOWN IN DETAIL D (BACK INSIDE VIEW) USING RTV (ITEM 14).

55 DRILL HOLE USING .221 DIAMETER DRILL. INSTALL INSERT (ITEM 22) PER NASA/JSC PRC-9004, (FROM OUSIDE TO INSIDE) INTO HOLE UNTIL SHOULDER IS IN CONTACT WITH OUTSIDE OF REAR ACCESS DOOR ASSY.

54 REMOVE MATERIAL AS SHOWN EXTENDING EXISTING SLOTS WHILE MAINTAINING PRESENT WIDTH DIMENSIONS.

53 REMOVE BATTERY ACCESS COVER AND DISCARD BOTH COTS FASTENERS. FILL HOLES WITH RTV (ITEM 14), FLUSH WITH SURFACES.

52 COVER EXISTING COTS DECAL WITH ASD DECAL (ITEM 6).

51 REATTACH SYSTEM PCB USING COTS HARDWARE WITH THREAD SEALANT (ITEM 17).

50 REATTACH CHARGER PCB USING COTS HARDWARE WITH THREAD SEALANT (ITEM 17).

PROJECT E049 SWAB EXPERIMENT			
SIZE D	CAGE CODE 21356	DWG NO SEG46119448	REV
SCALE NONE	ORG EB4	FMT A01OCT02	SHEET 2 OF 7

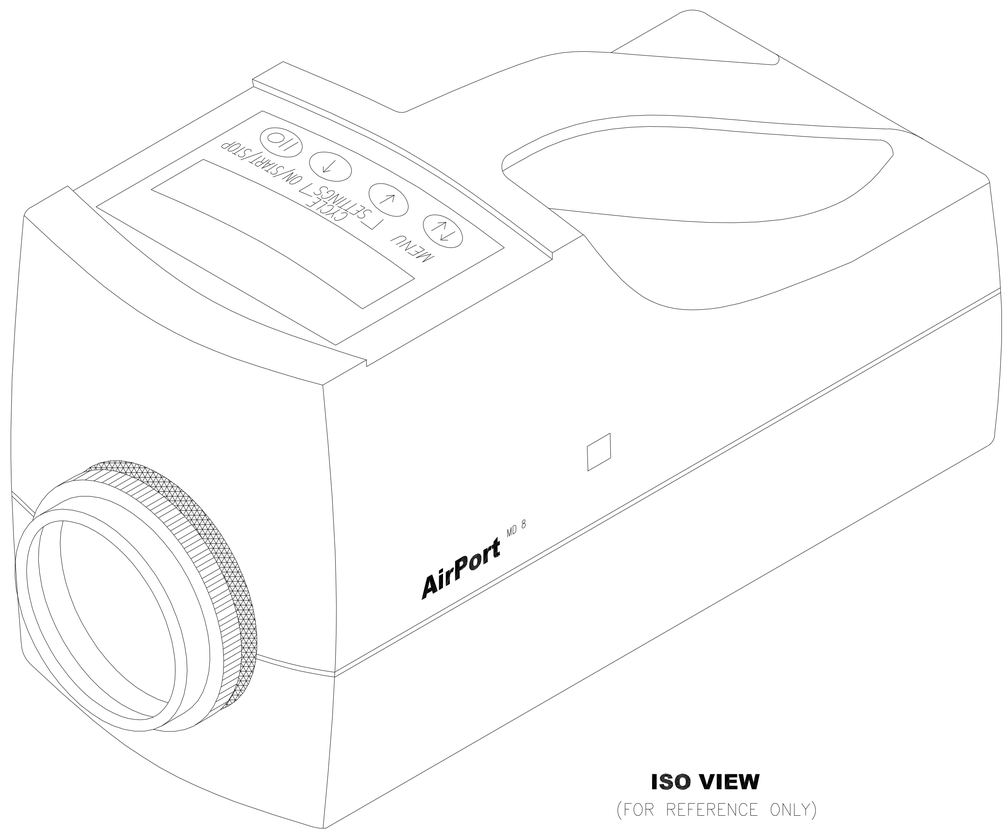

ISO VIEW

(FOR REFERENCE ONLY)

PROJECT	E049 SWAB EXPERIMENT		
SIZE D	CAGE CODE 21356	DWG NO SEG46119448	REV
SCALE NONE	ORG EB4	FMT A01OCT02	SHEET 3 OF 7

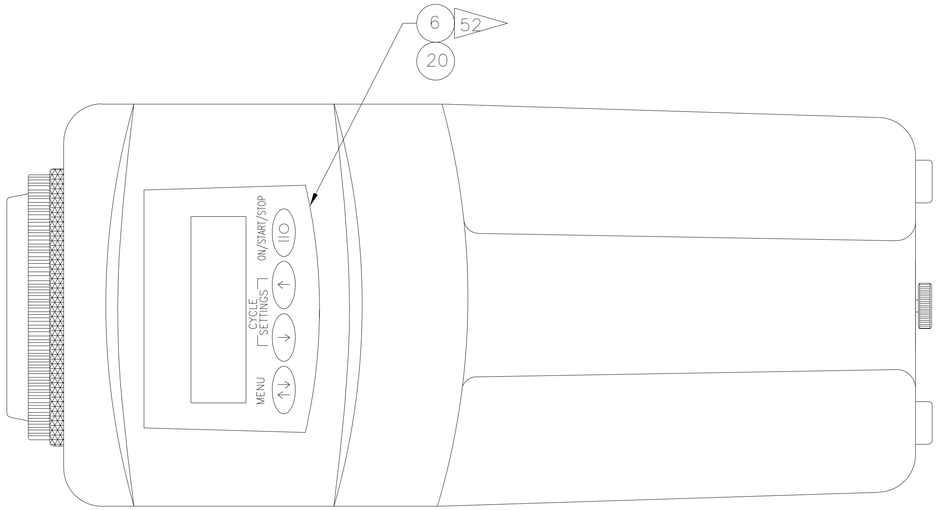

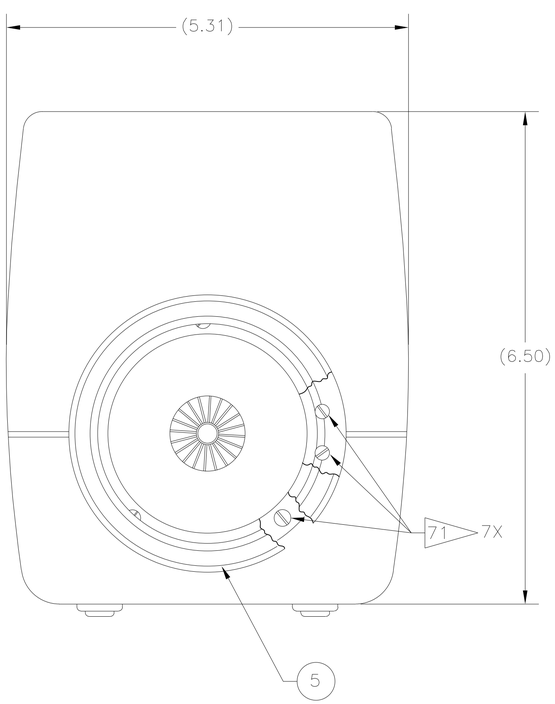

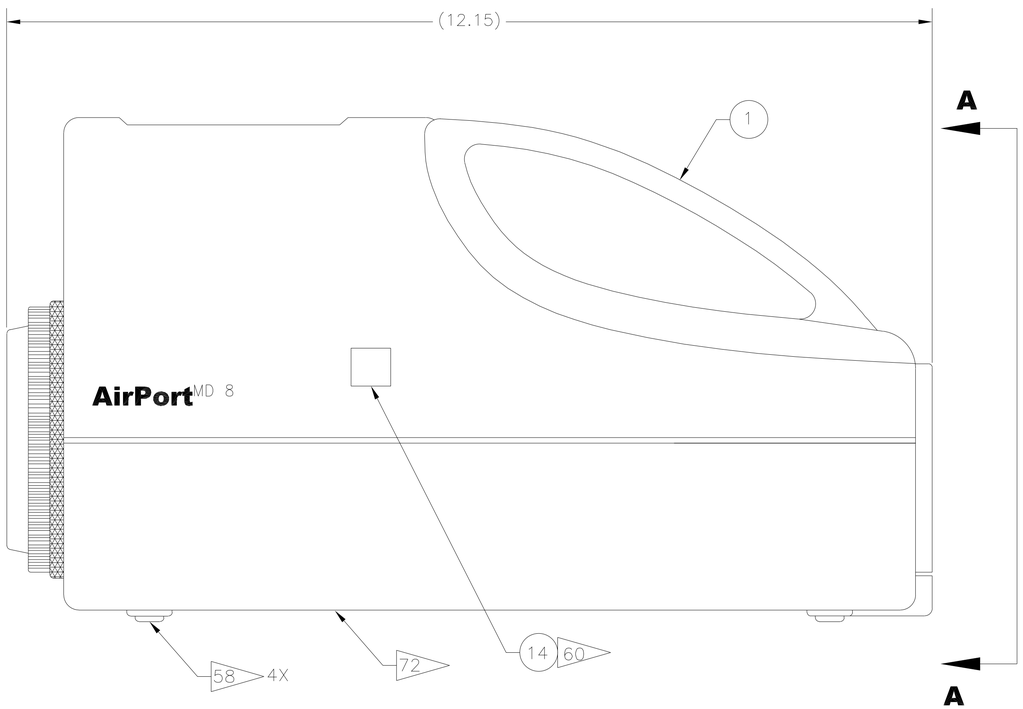

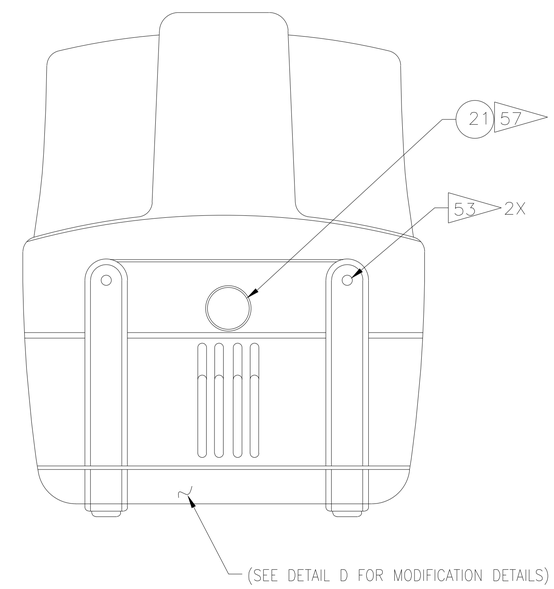

-301 (WITH BATTERY PACK)
-302 (WITHOUT BATTERY PACK)

PROJECT	E049 SWAB EXPERIMENT		
SIZE D	CAGE CODE 21356	DWG NO SEG46119448	REV
SCALE NONE	ORG EB4	FMT A01OCT02	SHEET 4 OF 7

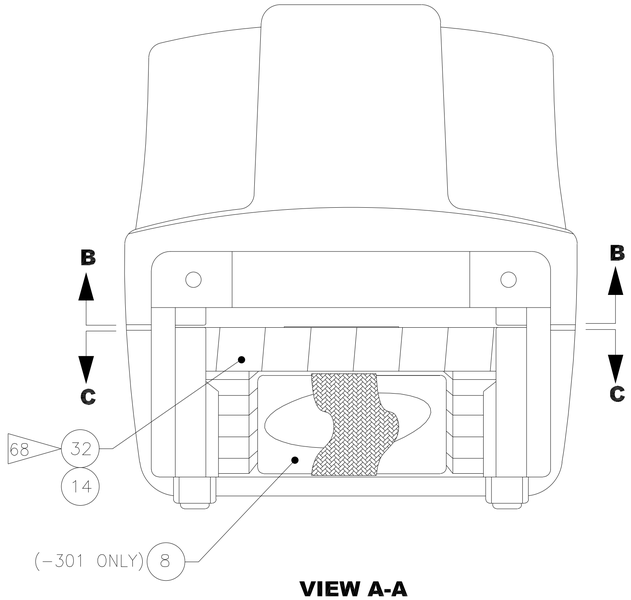

VIEW A-A

(REAR VIEW WITH BATTERY ACCESS DOOR REMOVED)

-301 AND -302 WIRE DATA LIST							
SOURCE	FROM	PIN NUMBER	DESTINATION	TO	PIN NUMBER	WIRE	LENGTH (IN INCHES)
SYS CONT PCB	J1	1	MOTOR POS	P1	1	M22759/11-22-0	14 ±.5
SYS CONT PCB	J1	2	MOTOR NEG	P1	2	M22759/11-22-0	14 ±.5
SYS CONT PCB	J4	1	ENCODER	P4	1	M22759/11-22-9	22 ±.5
SYS CONT PCB	J4	2	ENCODER	P4	2	M22759/11-22-9	22 ±.5
SYS CONT PCB	J4	3	ENCODER	P4	3	M22759/11-22-9	22 ±.5
SYS CONT PCB	J4	4	ENCODER	P4	4	M22759/11-22-9	22 ±.5
SYS CONT PCB	J4	5	ENCODER	P4	5	M22759/11-22-9	22 ±.5
SYS CONT PCB	J2	1	CHARGING PCB	J1	3	M22759/11-22-9	14 ±.5
SYS CONT PCB	J2	2	CHARGING PCB	J1	4	M22759/11-22-0	14 ±.5
CHARGING PCB	J1	5	BATTERY POS	J6	1	M22759/11-22-9	8 ±.5
CHARGING PCB	J1	6	BATTERY NEG	J6	3	M22759/11-22-0	8 ±.5
CHARGING PCB	J1	7	CHARGING PCB	J1	8	M22759/11-22-0	.5 ±.125
LCD PCB		V+	SYS. CONT.		V+	M22759/11-22-9	2.5 ±.5
LCD PCB		V−	SYS. CONT.		V−	M22759/11-22-0	2.5 ±.5
CHARGING PCB	J1	9	BATTERY	J6	2	M22759/11-22-0	8 ±.5

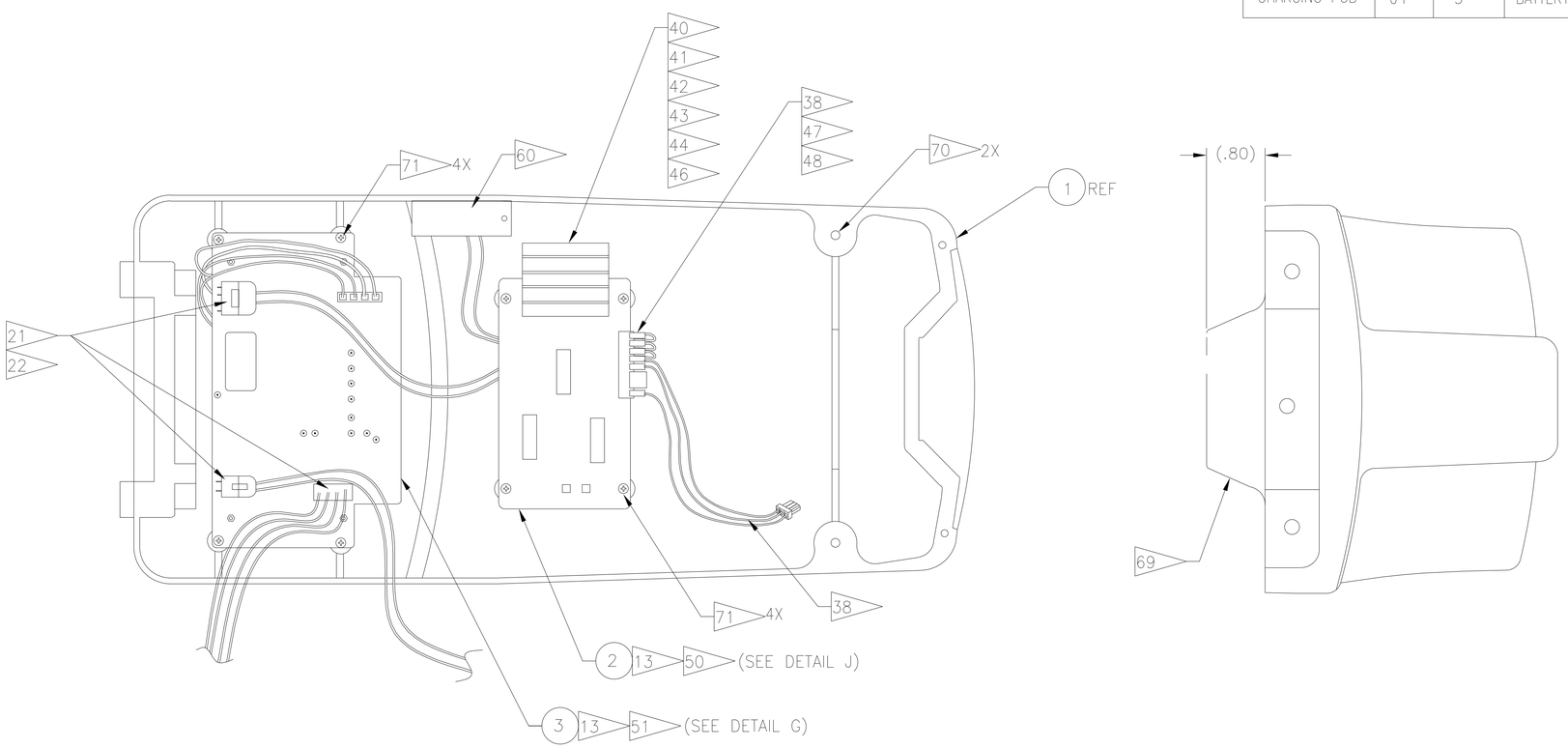

SECTION B-B

ROTATED 90° CW

(UNDERSIDE VIEW OF TOP HALF)

PROJECT	E049 SWAB EXPERIMENT		
SIZE D	CAGE CODE 21356	DWG NO SEG46119448	REV
SCALE NONE	ORG EB4	FMT A010CT02	SHEET 5 OF 7

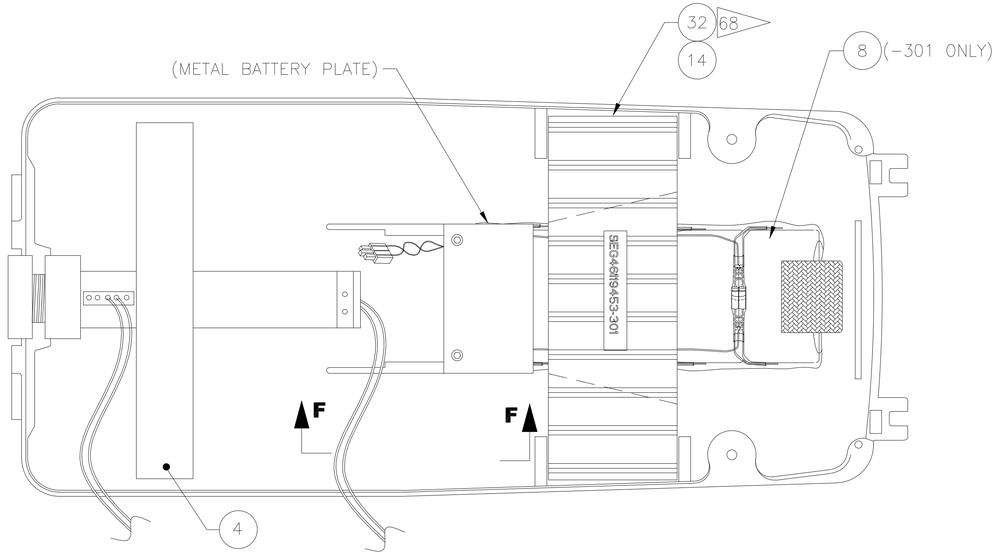

SECTION C-C

(UNDERSIDE VIEW OF TOP HALF)

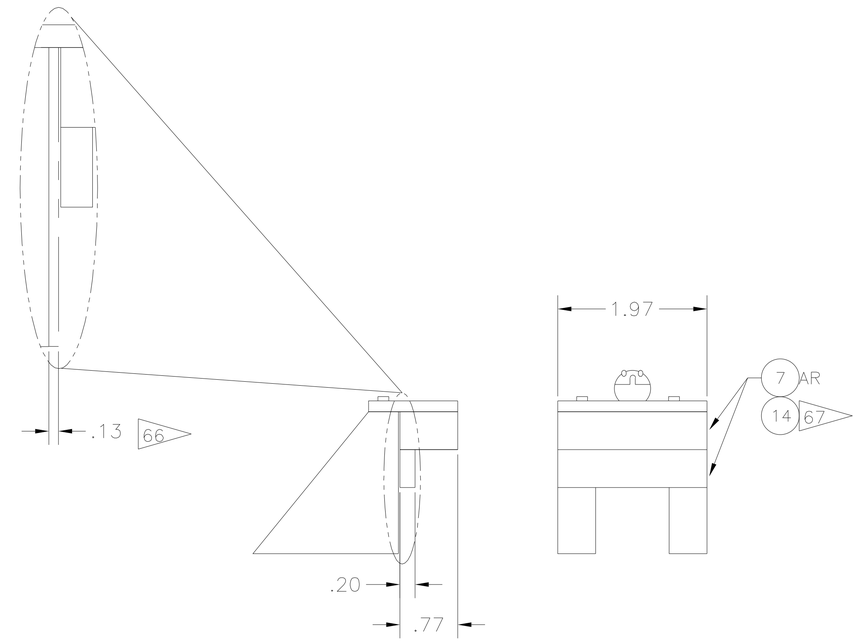

VIEW F-F

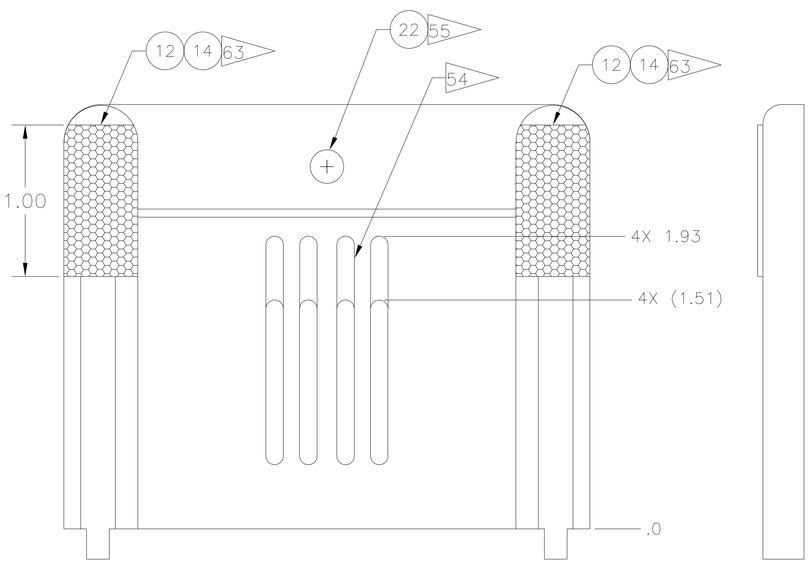

(FRONT/OUTSIDE VIEW)

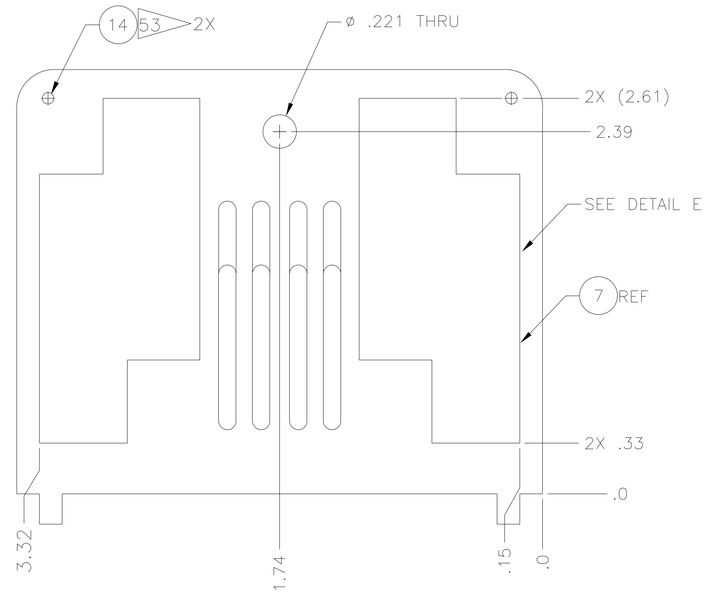

(BACK/INSIDE VIEW)

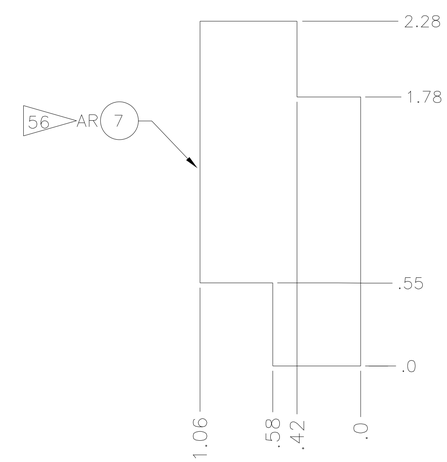

DETAIL E
2X

DETAIL D

(BATTERY ACCESS COVER MODIFICATION DETAILS)

PROJECT	E049 SWAB EXPERIMENT		
SIZE D	CAGE CODE 21356	DWG NO SEG46119448	REV
SCALE NONE	ORG EB4	FMT A01OCT02	SHEET 6 OF 7

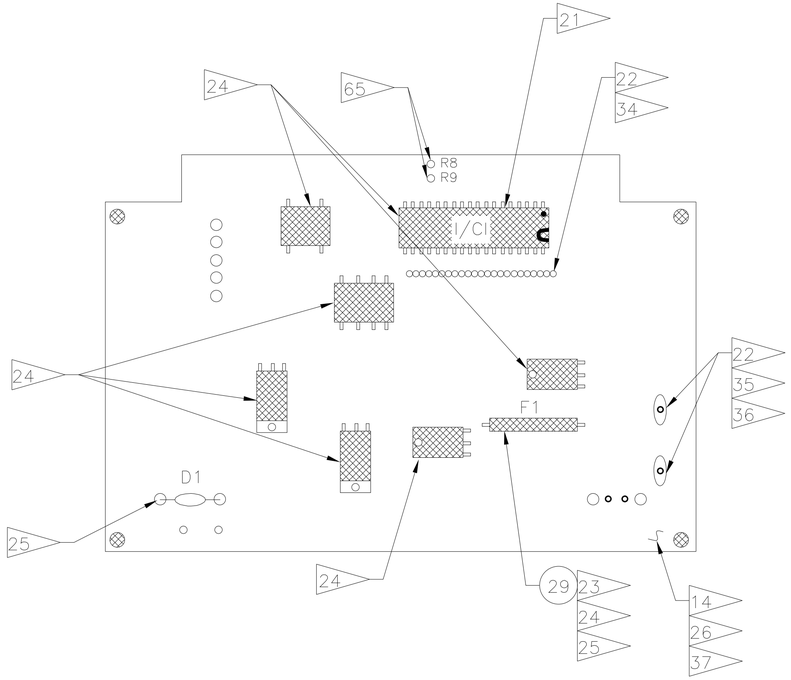

(SYSTEM CONTROL PCB TOP VIEW)

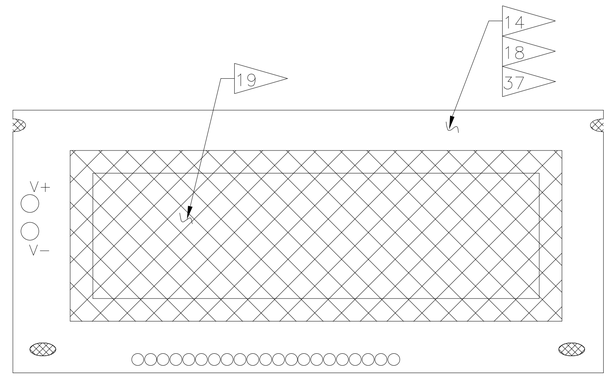

(LCD PCB TOP VIEW)

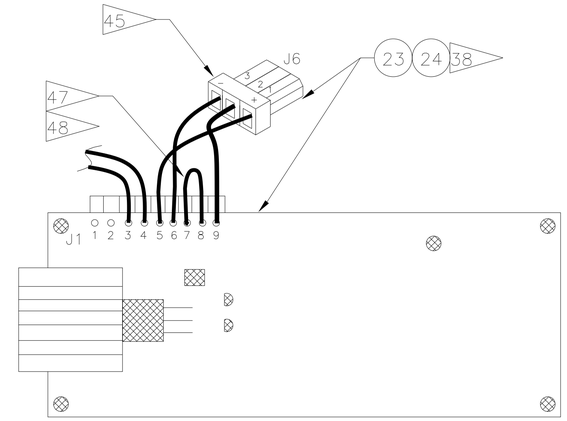

DETAIL J
(CHARGER PCB)

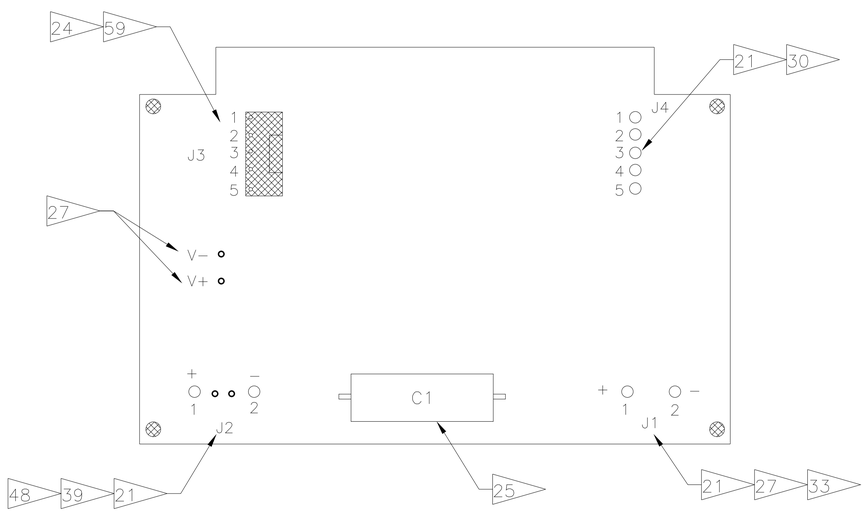

(SYSTEM CONTROL PCB BOTTOM VIEW)

DETAIL G

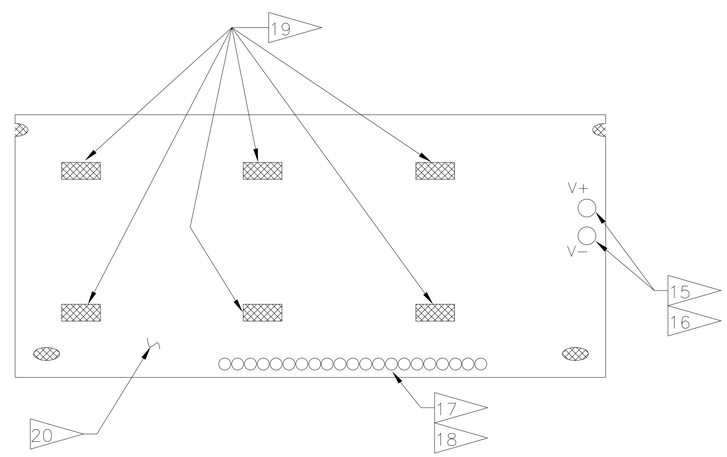

(LCD PCB BOTTOM VIEW)

DETAIL H

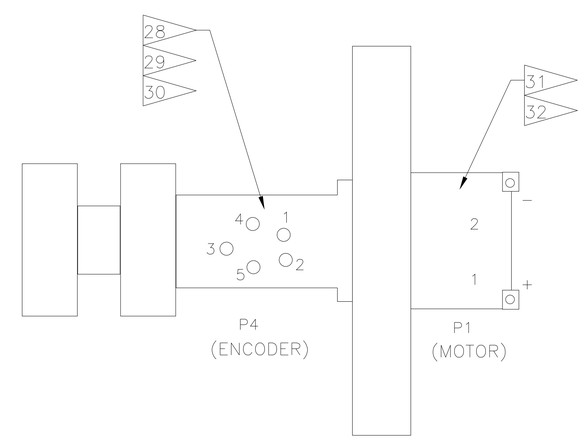

DETAIL K

PROJECT	E049 SWAB EXPERIMENT		
SIZE D	CAGE CODE 21356	DWG NO SEG46119448	REV
SCALE NONE	ORG EB4	FMT A01OCT02	SHEET 7 OF 7