LTR	ZONE	DESCRIPTION OF CHANGE
NC	C-7	1. ADDED FLAG NOTE 1 CALLOUT TO D1.
	A-8	2. ADDED FLAG NOTE 1.
	A-8	3. ADDED -301 AND -302 TO NOTE 8.

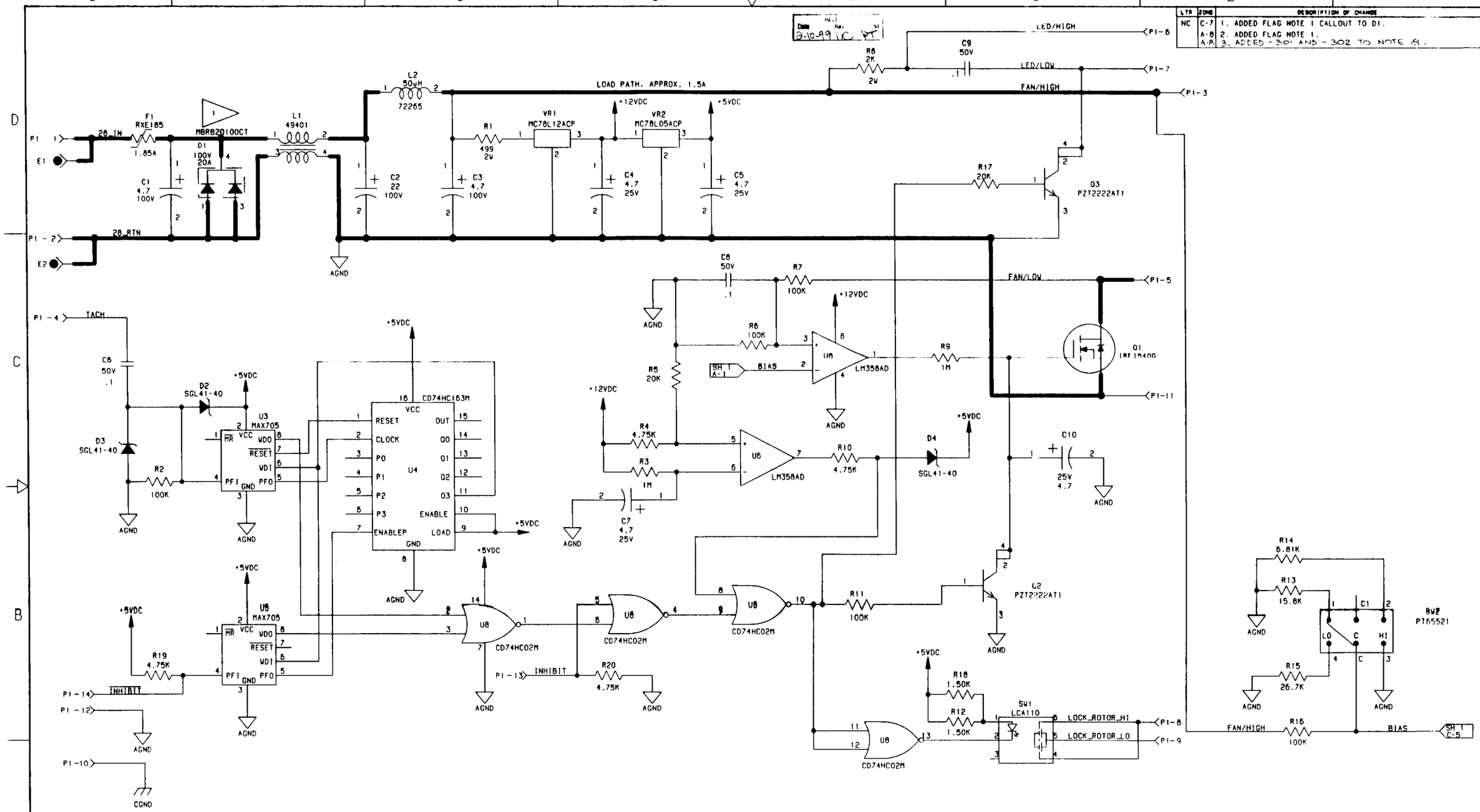

1. D1 IS NOT INSTALLED.

FLAG NOTES:

7. ALL REFERENCED SPECIFICATIONS AND STANDARDS SHALL BE OF THE LATEST REVISION LEVEL OR AS SPECIFIED IN THE PROCUREMENT DOCUMENT. IN THE CASE OF CONFLICT, THE PROCUREMENT DOCUMENT SHALL TAKE PRECEDINCE.
6. LAST REFERENCE DESIGNATOR USED: C10, D4, F1, L2, P1, Q3, R20, SW2, U8, VR2.
5. REFERENCE DESIGNATORS NOT USED: U1, U2, U7.
4. THIS SCHEMATIC USED IN CONJUNCTION WITH SEG46115961-301 AND -302
3. CAPACITOR VALUES ARE IN MICRO FARADS.
2. RESISTOR VALUES ARE IN OHMS, 1/4 WATT, 1%.
1. INTERPRET DRAWING PER EDS MANUAL JPG 8500.4.

NOTES: UNLESS OTHERWISE SPECIFIED

DIMENSIONAL TOLERANCE UNLESS NOTED OTHERWISE .0 ±.1 .000 ±.005 .00 ±.02 ANGULAR ±.5°

SURFACE FINISH IN MICROINCHES RMS UNLESS NOTED OTHERWISE 63

FRACTURE CRITICAL ☐ YES ☒ NO

NEXT ASSY SEG46115961

DWG FILE: 5962 SH1.HP

LIBRARY: \PCAD\RELEASE\SCH

☒ FLT HDWR ☐ APPLICABLE GSE

☐ OTHER (SPECIFY)

SIGNATURES		DATE
DR	Z. PALMER	10/19/98
ENG	K. Bennett	11/5/98
CH	[illegible]	11/9/98
APP	[illegible]	2/9/99
QE	[illegible]	2/5/99
MATL		
STRESS	[illegible]	01/8/99
AUTH		

NATIONAL AERONAUTICS AND SPACE ADMINISTRATION
LYNDON B. JOHNSON SPACE CENTER HOUSTON, TEXAS

PRINTED WIRING DIAGRAM FAN CONTROLLER HRF (LPI)

PROJECT ETAC

SIZE	CODE IDENT NO.	DWG NO.	REV
D	21356	SIG46115962	NC

SCALE: NONE ORG. EA5 SHEET 1 OF 1