WIRING DATA LISTING

FUNCTION	FROM	PIN NO.	TO	PIN NO.	WIRE	LENGTH	NOTES
MIC BIAS	P10	6	J2	6	M22759/22-24-9	118"	
BIAS RTN	P10	11	J2	11	M22759/22-24-0	118"	
MIC IN	P10	12	J2	12	M22759/22-24-9	118"	
GND (MIC)	P10	3	J2	3	M22759/22-24-0	118"	
AUDIORT	P10	7	J2	9	M22759/22-24-9	118"	
GND (AR)	P10	2	J2	10	M22759/22-24-0	118"	
AUDIOLF	P10	9	J1	9	M22759/22-24-9	110"	
GND (AL)	P10	10	J1	10	M22759/22-24-0	110"	
OUTACNT0	P10	4					
OUTACNT1	P10	13					
SHIELD	P10	8	J2	8	GROUND		
			J1	8	GROUND		

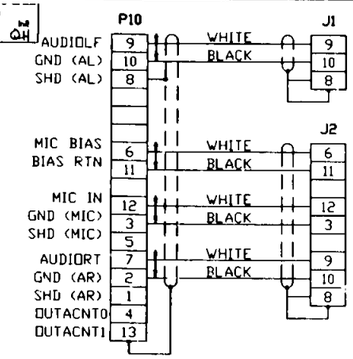

WIRING DIAGRAM

28> GROUND SHIELD TO EMI BACKSHELL RINGS (ITEM 5).

27> GLENAIR INC., GLENDALE, CA.

26> RAYCHEM CORP., MENLO PARK, CA.

25> INDEPENDENT INK INC., GARDENA, CA.

24> TERMINATE SHIELD BY WRAPPING WITH 4 TURNS OF BUS WIRE (ITEM 17) AND ATTACHING UP TO 6 INCHES OF 24 AWG WIRE (ITEM 15).

23> APPLY ONE DROP OF ADHESIVE (ITEM 8) TO SCREW THREADS ON BACKSHELL CLAMP PER JSCM 8080 M/P 10.

22> ALIGN THE LEFT CABLE WITH ITS HEADPIECE. FORM A LOOP WITH THE LEFT CABLE AND BUNDLE IT NEAR THE EARPHONE ALONG WITH THE MIC WIRE AND RIGHT CABLE. SEE VIEW B-B. WHEN BUNDLIING THE CABLES, OBSERVE THE CABLE LENGTHS SHOWN.

21> BUNDLE THE RIGHT MIC WIRE WITH THE RIGHT CABLE USING CABLE TIES (ITEM 10). ROUTE THE RIGHT CABLE OVER THE HEADPIECE, SECURING IT TO ITS OWN HEADPIECE ONLY.

20> SLIDE THE HEADPIECE OF THE SECOND HEADSET (ITEM 1) THROUGH HOLE "B" OF THE COUPLER (ITEM 6) TO OBTAIN THE CONFIGURATION SHOWN. AGAIN, FOR THE SECOND HEADSET, BEND THE HEADPIECE AROUND THE DEVICE (ITEM 6) TO RETAIN IT--SEE DETAIL A.

19> SLIDE 3 TEFLON COUPLERS (ITEM 6) ONTO ONE HEADSET (ITEM 1). ROUTE THE HEADPIECE THROUGH HOLE "A" OF THE COUPLER. BEND WIRE AROUND THE LAST TEFLON DEVICE TO RETAIN IT--SEE DETAIL A.

18> CUT AND DISCARD 2 INCHES OFF THE END OF THE HEADPIECE. SMOOTH OFF THE CUT END OF THE HEADPIECE.

17> REMOVE PROTECTIVE COVERS FROM HEADPIECE.

16> PERFORM CONTINUITY AND DIELECTRIC TESTS ON THIS CABLE SEGMENT PER LS-60035.

15> COVER TETHER CHAIN OF CAP WITH HEAT-SHRINK TUBING (ITEM 20). ATTACH TETHER TO BACKSHELL USING THE BACKSHELL FASTENING HARDWARE.

14> COVER END WITH HEAT-SHRINK TUBING (ITEM 14).

13> ALPHA WIRE CORP., ELIZABETH, NJ.

12> ON THE SIDE WHERE THE CABLES ARE BUNDLED, CUT THE MICROPHONE WIRE APPROX. MID-LENGTH, THEN REMOVE THE MICROPHONE ASSEMBLY. SEAL OFF THE CUT MICROPHONE WIRE WITH HEAT-SHRINK TUBING (ITEM 14).

11> REMOVE PART NUMBER LABEL.

10> MARK LABEL "J2 RIGHT, MIC".

9> MARK LABEL "J1 LEFT".

8> MARK LABEL "P10 AUDIO".

7> MARK LABEL "SEG46115679-701 SN 100X, VEG".

6> TYPE LABEL IDENTIFICATION AS SHOWN USING BRADY MARKER XC PLUS PRINTER AND ROLL FILM (ITEM 11) FOR CABLE MARKING, AT THE DESIRED LOCATION, WRAP 2-3 TIMES WITH GLASS CLOTH TAPE (ITEM 12). PLACE ROLL FILM (ITEM 11) ON GLASS CLOTH TAPE (ITEM 12) WITH MARKING SHOWING AND WRAP TWICE WITH CLEAR TAPE (ITEM 13). CUT OFF ANY EXCESS MATERIAL.

5> 3M, ST. PAUL, MN.

4> BRADY CO., MILWAUKEE, WI.

3> PANDUIT CORP., TINLEY PARK, IL.

2> BENTLEY HARRIS, LYONSVILLE, PA.

1> LOCTITE CORP., NEWINGTON, CT.

FLAG NOTES:

5. TOLERANCE ON CABLE LENGTHS IS +2.0/-0.5 INCHES.
4. ALL REFERENCED SPECIFICATIONS AND STANDARDS SHALL BE OF THE LATEST REVISION LEVEL OR AS SPECIFIED IN THE PROCUREMENT DOCUMENT. IN THE CASE OF CONFLICT, THE PROCUREMENT DOCUMENT SHALL TAKE PRECEDENCE.
3. CLEANLINESS REQUIREMENTS PER SN-C-0005C LEVEL GC.
2. ALL DIMENSIONS ARE IN INCHES.
1. INTERPRET PER EDS MANUAL JPG 8500.4.

NOTES: UNLESS OTHERWISE SPECIFIED.

-701	PART NUMBER	DESCRIPTION	MATERIAL	SPECIFICATION	ITEM
AR	SRF-1/4-0	HEAT SHRINK TUBING	SILICONE ELASTOMER	26> MIL-I-23053	20
1	MS27510F10CL	TETHERED CAP	ELECTROLESS NICKEL FINISH	MIL-C-38999	19
AR	73X ORANGE	MARKING, INK		25>	18
1 FT	QQVS343S24S1T	BUS WIRE, 24 AWG		QQ-W-343	17
25 FT	2166	BRAIDED, SLEEVE, 1/8"	TINNED COPPER	13>	16
50 FT	M22759/22-24-0	WIRE, STRANDED, 24 AWG, BLACK	TEFLON	MIL-W-22759	15
AR	M23053/8-003-C	HEAT SHRINK TUBING	POLYVINYLIDENE FLOURIDE	MIL-I-23053	14
AR	800-1	TAPE, CLEAR		5>	13
AR	361-1	TAPE, GLASS CLOTH		5>	12
AR	WRCM-717-637W	MARKER, CABLE	TEDLAR ROLL FILM	4>	11
AR	PLTIM-C76	CABLE TIE	TEFZEL	3>	10
25 FT	6745002	BRAID, EXPANDO, 1/4"		2>	9
AR	222	ADHESIVE	POLYGLYCOL DIMETHACRYLATES, POLYGLYCOL OLEATES	1>	8
50 FT	M22759/22-24-9	WIRE, STRANDED, 24 AWG, WHITE	TEFLON	MIL-W-22759	7
3	SDG46115680-001	COUPLER, LIGHT WEIGHT HEADSET	TEFLON		6
3	380KS019M1008DA3	BACKSHELL, EMI	NICKEL PLATED	27>	5
1	MS27484T10F35P	CONNECTOR, 13-PIN	ELECTROLESS NICKEL FINISH	MIL-C-38999	4
2	MS27497T10F35S	CONNECTOR, 13-PIN	ELECTROLESS NICKEL FINISH	MIL-C-38999	3
2	SED39123207-503	EAR CUSHION, LEATHERETTE, BLACK, SMOOTH		ACS P/N 632-063C	2
2	SED16101291-305	VERY LIGHTWEIGHT HEADSET			1
-	-701	LIGHT WEIGHT HEADSET ASSEMBLY			

SIGNATURES		DATE
DR	C. NUNEZ	8/28/97
ENG		10/30/97
CH		11/6/97
APPD		11/10/97
QE		11/12/97
MATL TYP		11/12/97
STRESS		11/12/97
AUTH		11/12/97

NATIONAL AERONAUTICS & SPACE ADMINISTRATION
LYNDON B. JOHNSON SPACE CENTER HOUSTON, TEXAS

LIGHT WEIGHT HEADSET ASSEMBLY

PROJECT: VEG

SIZE D | CODE IDENT NO. 21356 | DWG NO. SEG46115679

SCALE: NONE | SHEET 1 OF 2

543

REV	ZONE	DESCRIPTION OF CHANGE

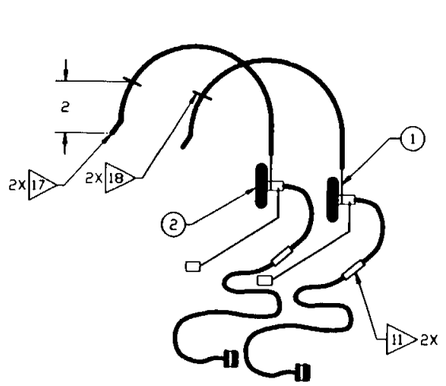

STEP 1

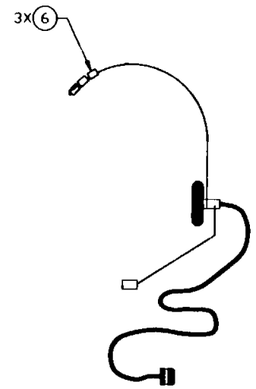

STEP 2

19

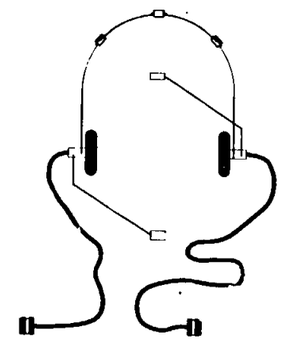

STEP 3

20

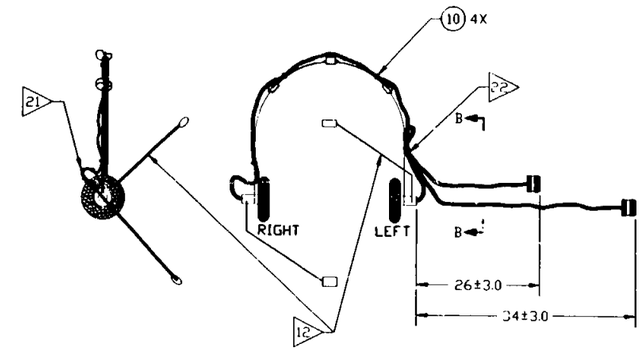

STEP 4

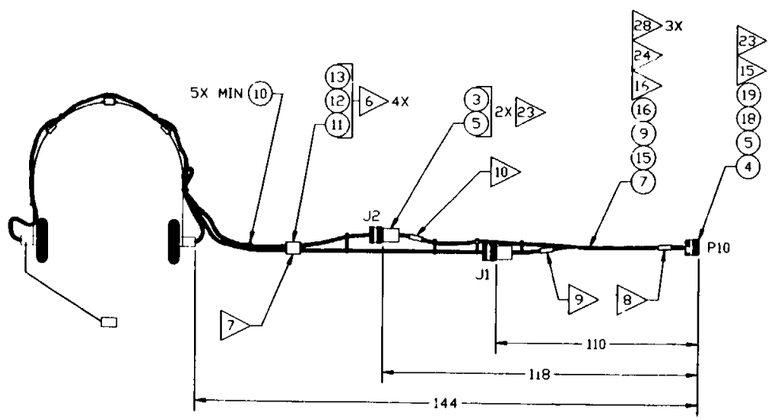

STEP 5

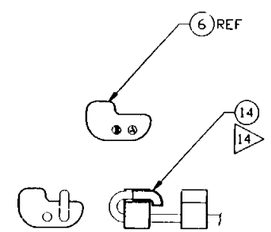

DETAIL A

2 PLACES

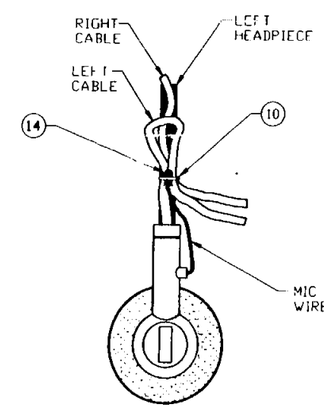

VIEW B-B

-701

SIZE	CODE IDENT NO.	DWG NO.
D	21356	SEG46115679
SCALE NONE		EAS SHEET 2 OF 2

10/29/97 C. NUNEZ (380)

544

DRAWING CHANGE NOTICE

SHEET 1 OF 1

DCN NUMBER		
DRAWING NO. SEG46115679	REV NC	SEQ # 01

DRAWING TITLE: LIGHT WEIGHT HEADSET ASSEMBLY

PROJECT: J104

REASON FOR CHANGE: ADD ITEMS, FLAGNOTE, AND CHANGE PART NO. AND FLAGNOTE.

ORIGINATOR C. SHANNON	DATE 11/25/97	QE M. IWASA	DATE 12/15/97
ENG C. CHARLES	12/1/97	MATL F. MONTELEONE	12/15/97
CH R.A. BULAND	12/4/97	STRESS F. YUNG	12/11/97
APP A. PLAZA	12/15/97		
AUTH		FINAL APP	

FLAG NOTE 12 WAS: ON THE SIDE WHERE THE CABLES ARE BUNDLED, CUT THE MICROPHONE WIRE APPROX. MID-LENGTH, THEN REMOVE THE MICROPHONE ASSEMBLY. SEAL OFF THE CUT MICROPHONE WIRE WITH HEAT-SHRINK TUBING (ITEM 14).

FLAG NOTE 12 IS: ON THE SIDE WHERE THE CABLES ARE BUNDLED, CUT THE MICROPHONE WIRE APPROX. MID-LENGTH, THEN REMOVE THE MICROPHONE ASSEMBLY. COVER THE END OF THE CUT MICROPHONE WIRE WITH COPPER TAPE (ITEM 21);TAPE MUST HAVE GOOD CONTACT WITH CABLE SHIELD. COVER TAPE WITH HEAT-SHRINK TUBING (ITEM 22).

ADD FLAGNOTE:

29 3M, AUSTIN, TX.

PARTS LIST:

ITEM 20 PART NO. WAS: SRF-1/4-0

ITEM 20 PART NO. IS: SFR-1/4-0

ZONE B3:

WAS: 14

IS: 21 22

ADD TO PARTS LIST:

-701	PART NUMBER	DESCRIPTION	MATERIAL	SPECIFICATION	ITEM	(IS)(WAS)
AR	M23053/8-005-C	HEAT SHRINK TUBING	POLYVINYLIDENE FLOURIDE	MIL-I-23053	22	
AR	1181	COPPER FOIL TAPE	COPPER/ACRYLIC	29	21	

DWG FILE: DCN49115679.asc PROJECT: J104-HRF-VEG LIBRARY: NON-ASC-DWGS