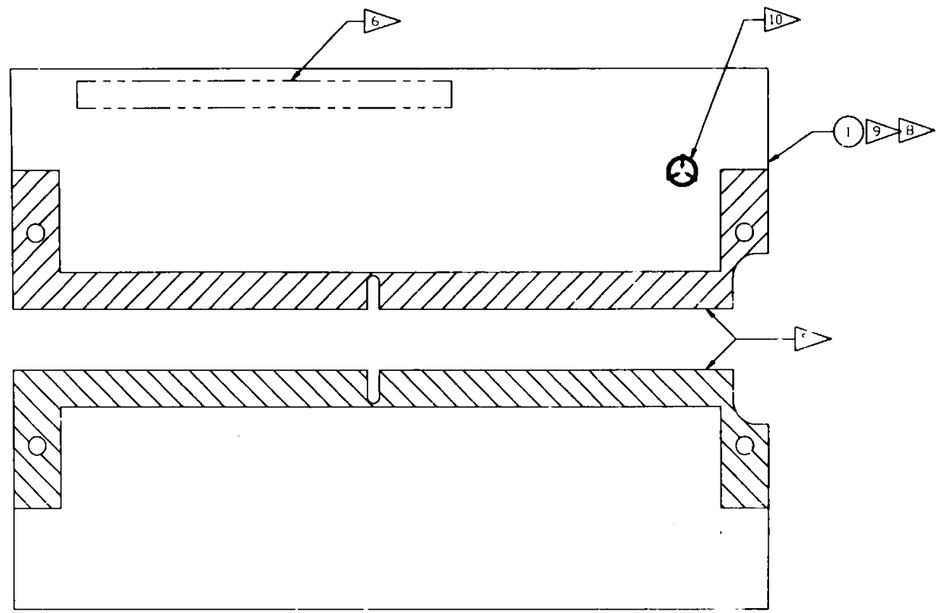

COMPONENT SIDE

ALTERED ITEM DRAWING

LTR	ZONE	REVISION	DATE	EQUIP TYPE	APPROVAL

10 PERMANENTLY INK STAMP ESD SYMBOL, USING MARKING INK (ITEM 3). LOCATE APPROXIMATELY AS SHOWN.

9 APPLY 3140 CONFORMAL COATING (ITEM 3) THINNED WITH NAPTHA (ITEM 5) TO BOTH SIDES OF BOARD (ITEM 1) PER NHB 5300.4 (3J) PARA 3J500, 3J501, AND 3J502.

8 PRIME PER NHB 5300.4 (3J) PARA 3J402 USING PRIMER (ITEM 4).

7 PARKS CORP, SOMERSET, MA.

6 PERMANTENTLY INK STAMP PART NUMBER AND SERIAL NUMBER IN .12 HIGH CHARACTERS USING MARKING INK (ITEM 2) PER JSC-SPEC-M-1 PARA 3.7.8. THE FIRST PRODUCTION RUN WILL BEGIN WITH S/N 1001 PER JSC 8500.3. LOCATE LOCATE APPROXIMATELY AS SHOWN.

5 MASK OFF AREA AS SHOWN AND DO NOT APPLY CONFORMAL COATING (ITEM 3) TO THIS AREA.

4 DOW CORNING, MIDLAND, MI.

3 INDEPENDENT INK INC., GARDENA, CA.

2 NOT USED.

1 KINGSTON TECHNOLOGY CO., SOUNTAIN VALLEY, CA.

NOTES:

4. THIS ASSEMBLY CONTAINS SOME COMPONENTS THAT ARE ESD SENSITIVE. HANDLE PER JSCM 5300.1
3. THIS ASSEMBLY CONTAINS NO FRACTURE CRITICAL ELEMENTS.
2. CLEANLINESS REQUIREMENT PER JSC-SN-C-0005, GC LEVEL.
1. INTERPRET PER JSCM 8500.

NOTES: UNLESS OTHERWISE SPECIFIED,

AR	2713	THINNER, NAPTHA			7	5
AR	1204	PRIMER			4	4
AR	3140	CONFORMAL COATING			4	3
AR	73X	MARKING INK	WHITE		3	2
1	SP NASA/64	MEMORY MODULE			1	1
	-301	MEMORY MODULE PWB				
-301	PART NUMBER	DESCRIPTION	MATERIAL	SPECIFICATION		ITEM

SIGNATURES	DATE
DR FRANK ORTIZ	5/16/97
ENG H. Chak	7/15/97
CH K.A. Boland	7/15/97
APP J. Boden	7/3/97
QE M. Johnson	7/28/97
MATL [illegible]	7/1/97
STRESS [illegible]	7/1/97
AUTH [illegible]	7/8/97

NEXT ASSY SDG46115675

CALC WT:

MOD FILE:

DRW FILE: F115496.dwg

EQUIP TYPE
☒ FLT HDWR
☐ OTHER (SPECIFY)
☐ APPLICABLE GSE

NATIONAL AERONAUTICS & SPACE ADMINISTRATION
LYNDON B. JOHNSON SPACE CENTER HOUSTON, TEXAS

CPU MAIN MEMORY
SIMM, VEG
ALTERED ITEM DRAWING

CODE IDENT NO.	SIZE	DWG NO.
21356	D	SDG46115496
SCALE NONE	STS90-J104	SHEET 1 OF 1

372