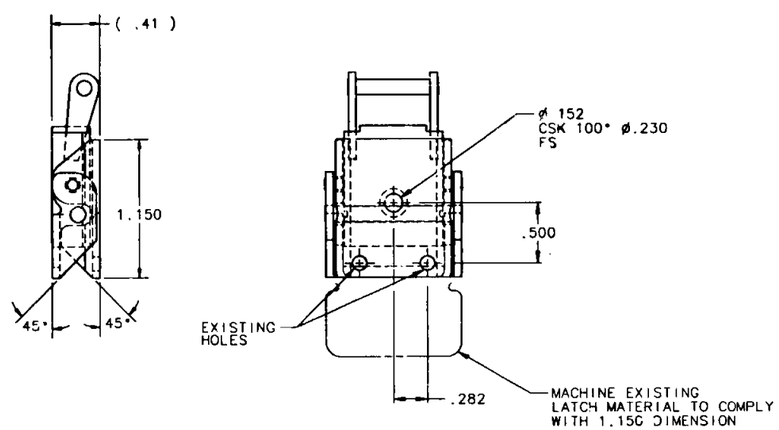

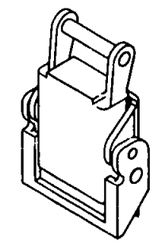

-001

ALTERED ITEM DRAWING

-	-001	LATCH	MAKE FROM PN HC83314-802SS	1
-001	PART NUMBER	DESCRIPTION	MATERIAL	SPECIFICATION

DIMENSIONAL TOLERANCE UNLESS NOTED OTHERWISE
0 ± .1 .000 ± .010
00 ± .03 ANGULAR ±

SURFACE FINISH IN MICROINCHES RMS UNLESS NOTED OTHERWISE ✓

NEXT ASSY: SEG46114980

SIGNATURES	DATE
DR C. SHANNON	8/11/97
ENG	7/10/97
CH	7/9/97
APP	7/17/97
QE	7/17/97
MATL	7/17/97
STRESS	7/21/97
AUTH	7/17/97

NATIONAL AERONAUTICS & SPACE ADMINISTRATION
LYNDON B. JOHNSON SPACE CENTER HOUSTON, TEXAS

LATCH ASSEMBLY
ALTERED ITEM DRAWING
HRF

CODE IDENT NO 21356 | SIZE D | DWG NO. SDG46114975
SCALE 1/1 | EA5 PROJECT: J104 | SHEET 1 OF 1

CALC WT:
PROJECT: J104-VEG
LIBRARY: DRAWER
DRW FILE: 46114975.dwg

EQUIP TYPE
☒ FLT HDWR
☐ OTHER (SPECIFY)
☐ APPLICABLE ONE

6. BAG AND TAG PER JSC-SPEC-M-1, PARA 3.7.9.
5. CLEANLINESS REQUIREMENTS PER SN-C-0005 LEVEL GC.
4. THIS ASSEMBLY CONTAINS NO FRACTURE CRITICAL ELEMENTS.
3. ALL DIMENSIONS ARE IN INCHES.
2. FABRICATION TOLERANCES AND PRACTICES PER SKZ36103755.
1. INTERPRET PER JSCM 8500.
NOTES: UNLESS OTHERWISE SPECIFIED.

1 NIELSON HARDWARE HARTFORD, CT.

NOTES: