LTR	ZONE	REVISION	DATE	EQUIP TYPE	APPROVAL

RELEASED 7/17/97 NC QH

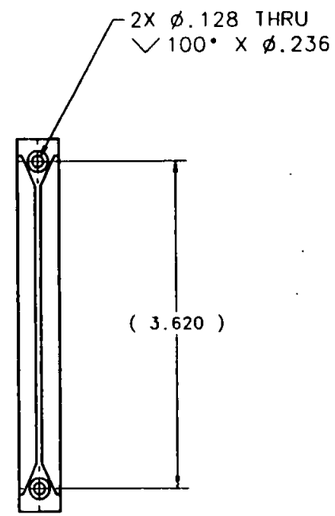

-001

(-001)

ALTERED ITEM DRAWING

1 UNITRAC INDUSTRIES INC., WEST CHESTER, PA.

NOTES:

6. BAG AND TAG PER JSC-SPEC-M-1, PARA 3.7.9.
5. CLEANLINESS REQUIREMENTS PER SN-C-0005 VC SENSITIVE.
4. THIS ASSEMBLY CONTAINS NO FRACTURE CRITICAL ELEMENTS.
3. ALL DIMENSIONS ARE IN INCHES.
2. FABRICATION TOLERANCES AND PRACTICES PER SKZ36103755.
1. INTERPRET PER JSCM 8500. NOTES: UNLESS OTHERWISE SPECIFIED.

-001 PART NUMBER	DESCRIPTION	MATERIAL	SPECIFICATION	NOTES
-	-001	CARD GUIDE	MAKE FROM PN RAD4125-CB POLYCARBONATE	1

DIMENSIONAL TOLERANCE UNLESS NOTED OTHERWISE
0 ± .1 .000 ± .010
.00 ± .03 ANGULAR ± 1°

SURFACE FINISH IN MICROINCHES RMS UNLESS NOTED OTHERWISE √

NEXT ASSY SEG46114201

SIGNATURES		DATE
DR	J. ADAMS	10-26-96
ENG		6/18/97
CH	R.A. Beeland	6/24/97
APP		7-13-97
OE		7/10/97
MATL		7/2/97
STRESS		7/1/97
AUTH		7-17-97

NATIONAL AERONAUTICS & SPACE ADMINISTRATION
LYNDON B. JOHNSON SPACE CENTER HOUSTON, TEXAS

CARD GUIDE, ICBM
ALTERED ITEM DRAWING-

CODE IDENT NO.	SIZE	DWG NO.
21356	C	SDG46114967

SCALE 1/1 EAS PROJECT: J104 SHEET 1 OF 1

CALC WT:

PROJECT: J104-HRF
LIBRARY: ICBM
DRW FILE: 46114967.dwg

EQUIP TYPE
☒ FLT HDWR
☐ OTHER (SPECIFY)
☐ APPLICABLE GSE

DCN NO. 122861

DRAWING CHANGE NOTICE

SHEET 1 OF 1

DRAWING NO.	REV	SEQ #
SDG46114967		

DRAWING TITLE
CARD GUIDE,
ICBM
ALTERED ITEM DRAWING

PROJECT
J104 - VEG

REASON FOR CHANGE
DRAFTING ERROR

		DATE		DATE
ORIGINATOR L. LEARD		97/09/08	QE M. Avera SQE	10/14/97
ENG		97/09/19	MATL	10/14/97
CB R.A. Buland		10/14/97	STRESS	10/16/97
APP		10/14/97		
AUTH		10/14/97		

10-17-97 nc fm

ZONE C4 CHANGE CSK ø ON DRILLED HOLES

WAS:

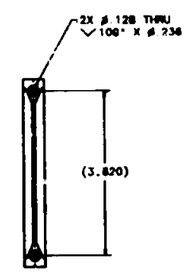

-001

IS:

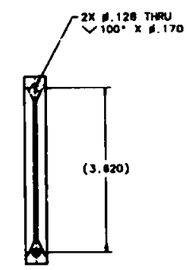

-001

QTY	PART NUMBER	DESCRIPTION	MATERIAL	SPECIFICATION	ITEM	(IS)(WAS)

DWG FILE: 46114967-DCN / PROJECT: J104-HRF-VEG / LIBRARY: ICBM